Engineering Reference

Frameless Application & Installation

Table of Contents

1. **Introduction** 295

   Direct Drive vs. Coupled Drive
   Radial Air Gamp Construction
   Servo Advantages
   Cost Advantages
   Summary

2. **Sizing** 297

   2.1 **Inertia**

   Rotor Inertia vs. Rotor Length

   2.2 **Thermal Resistance**

3. **Mounting/Housing** 300

   3.1 **Stator**

   3.2 **Rotor**

   3.3 **Final Assembly**

4. **Commutation Sensing and Implementation** 302

   4.1 **Hall Sensors**

   4.2 **Encoder/Commutation Sensing**

   4.3 **Resolver Sensing**

   4.4 **Timing Waveshapes**

1. Introduction

In many motion control applications, the typical design approach is to connect the drive motor to the load using some form of coupling, **so that the motor can be replaced when it fails.** Why is this the standard approach, and what does it presume?

The presumption is that the motor is the weakest link in the reliability chain, and therefore it is prudent to design a mechanism interface which will allow easy and fast replacement of the weak link. Because the presumption was verified by actual experience with brush motors in industrial applications, the motor-coupled-to-load standard was created. This type of construction allowed for quick replacement of DC brush motors, minimizing down time.

In most consumer products this standard is not employed. Rather, the motor is built into the product in its essential parts. Why? Because it is good design and it is economical. And because the AC motors generally used are very reliable and are not a weak link. Even the universal brush motor is used most often in a direct drive, parts configuration.

In motion control applications, the DC brushless motor is finding increased use to achieve high performance and reliability. However, designers are still using the old standard of coupling the motor to the load. A much better approach is to emulate consumer product designs and use a direct drive frameless motor construction.

Direct Drive vs. Coupled Drive

There are obvious economic, reliability and performance benefits in using direct drive construction. Figures 1 & 2 show coupled and direct drive designs.

The motor rotor and stator must be held in relative position to each other. The means for doing this in conventional motors is the motor housing, shaft and bearing assembly. This structure is then connected (coupled) to the load.

However, most loads in motion control applications already have shafts and bearings. It is usually very easy to create the means to construct the motor right on the load shaft.

While the coupled construction does allow for fast replacement of a defective motor, couplings add reliability and performance problems of their own. Most conventional designs use some form of flexible coupling. Flexible is a requirement because there is usually some amount of mis-alignment between the load and motor shafts. All flexible couplings behave as a torsional spring and some have freeplay (backlash).

Both of these characteristics result, ultimately, in lower servo gain. Lower servo gain means lower system bandwidth and stiffness, reducing system performance and stiffness. Also, the flexing and twisting of the couplings can ultimately lead to fatigue failure.

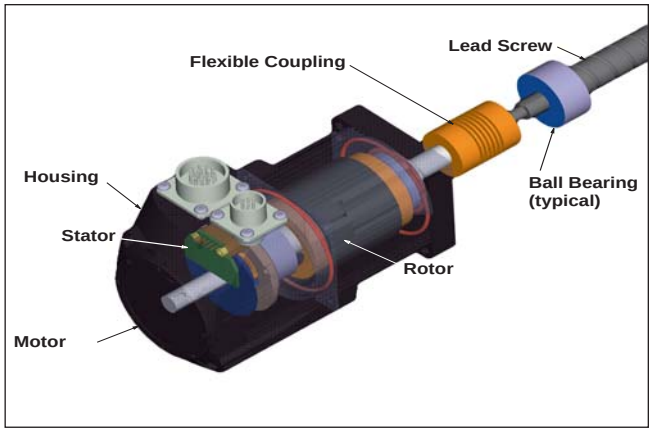

Figure 1 - Coupled Drive

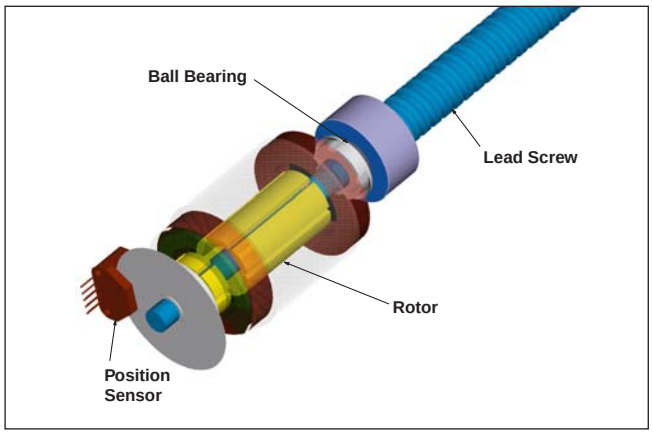

Figure 2 - Direct Drive

If a hard coupling rather than a flexible coupling is used, the reliability problems above are removed, but most often new ones are introduced. Unless the motor and load shafts are perfectly aligned, the hard coupling produces a once-around torque disturbance which is the result of pinching stresses on the bearings, resulting in poor servo performance and shorter bearing life.

Radial Air Gap Construction

Most direct drive, parts kits have radial air gaps (see Figure 3). This design does not create axial magnetic forces. Because the magnetic forces are radial through the gap, they are balanced within the structure once the rotor and stator are in their correct relative position. This balanced condition has three positive results.

First, there is no axial or radial loading on the bearings from magnetic forces, so bearing life is not affected.

Second, there is no audible noise generated so operation will be quiet. Third, it is possible to have end-play in the rotor shaft without having a

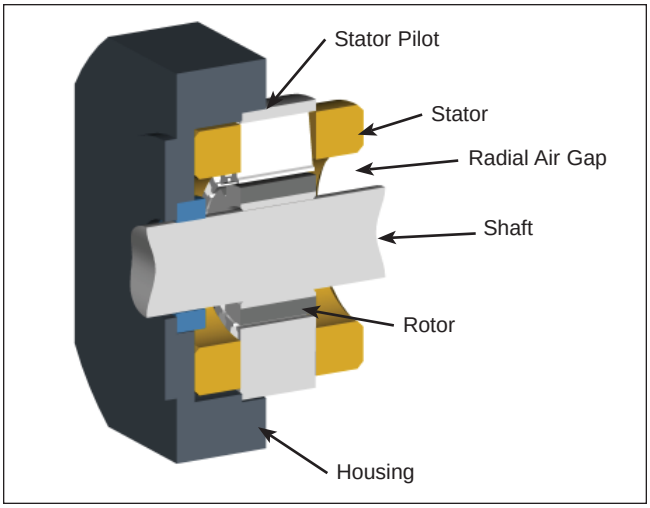

Figure 3
Radial Air Gap Kit

detrimental effect on motor performance. Therefore, this type of design is less sensitive to mechanical tolerancing.

Most brushless motors use ferrite or rare earth magnets. These magnets are not sensitive to being *open-circuited* as are Alnico magnets. This feature means that magnetic *keepers* are not necessary to maintain magnetization energy and therefore assembly of the rotor on the shaft (within the stator) is greatly simplified.

Also, using ferrite or rare earth magnets that have a large coercive force allows the air gap between the rotor and the stator to be relatively large; on the order of 0.381mm to 0.376mm (0.015in to 0.030in). Large gaps mean tolerances on part dimensions and concentricities may be large, leading to more economical parts and lower assembly costs.

A direct drive brushless kit consists of three components (Figure 4):

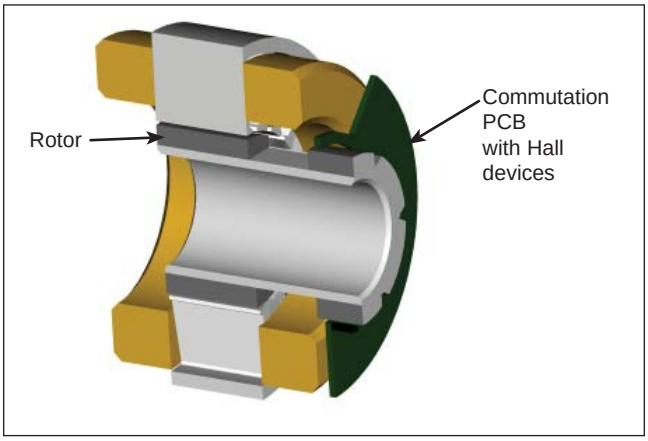

Figure 4
Kit Main Components

- The Stator, which has the winding and is, therefore, the heat producing component.
- The Rotor, which has the permanent magnets.
- A printed circuit board assembly (PCB), which holds and positions the Hall sensor devices that provide position information to the control electronics which in turn decodes the information and drives the stator. This PCB assembly is typically bonded to the end turns of the stator in a pre-determined position with respect to the stator windings. Alternatively, the commutation signals can be provided by an encoder or resolver which is also mounted on the product shaft (see section 4).

Servo Advantages

Two very important limitations on servo performance are the *torsional stiffness* between the motor, the load and the feedback transducer and *backlash* (or freeplay) which leads to a servo phenomenon called a *limit cycle* (or oscillation).

Semi-solid couplings which utilize the Oldham mechanical principle of cross-axis slides usually introduce backlash into the system, a little at first, but increasing with time and wear. A limit cycle is created when the motor output is un-coupled from the load and feedback transducer by the backlash, creating a deadzone or uncertainty zone. The result is a trapezoidal hysteresis loop as shown in Figure 5(a). Without backlash, a stable servo will have a step positional response as shown in Figure 5(b). With backlash and servo gain high enough to overcome stiction and friction, the motor will drive back and forth within the uncertainty zone, Figure 5(c), never coming to rest and producing noisy and life-shortening vibrations. The common solution to eliminating a limit cycle is to lower servo gain so that stiction and friction dampen the vibration. However, this solution also decreases servo stiffness (the resistance to external torsional disturbances) and final position accuracy.

Even if a coupling such as a bellows, spiral or disc coupling which has no freeplay is used, a coupling will still degrade the torsional stiffness of the system. Because these couplings are flexible, their torsional spring rates are usually lower than the torsional stiffness of the shafts they are connecting. A typical Bode plot of a positional system with two resonance points is shown in Figure 6. The two resonance points result from the coupling and the shaft torsional stiffness. The coupling resonance crosses above the zero db line and will cause servo disturbance and possible instability unless compensation and gain are used to keep resonance three to five decades above the zero crossing point. Usually the shaft resonance is well below the zero db line and well outside of the system bandwidth. Since the kit approach eliminates the coupling, all of these coupling problems are also eliminated.

In high performance systems, high torsional stiffness is necessary to accommodate high system gain and bandwidth. To produce this high stiffness , the goal is to place the source of the driving torque (the motor) as close to the load as possible. This requirement can be achieved with kit construction.
In addition, kit construction usually results in the lowest total inertia,

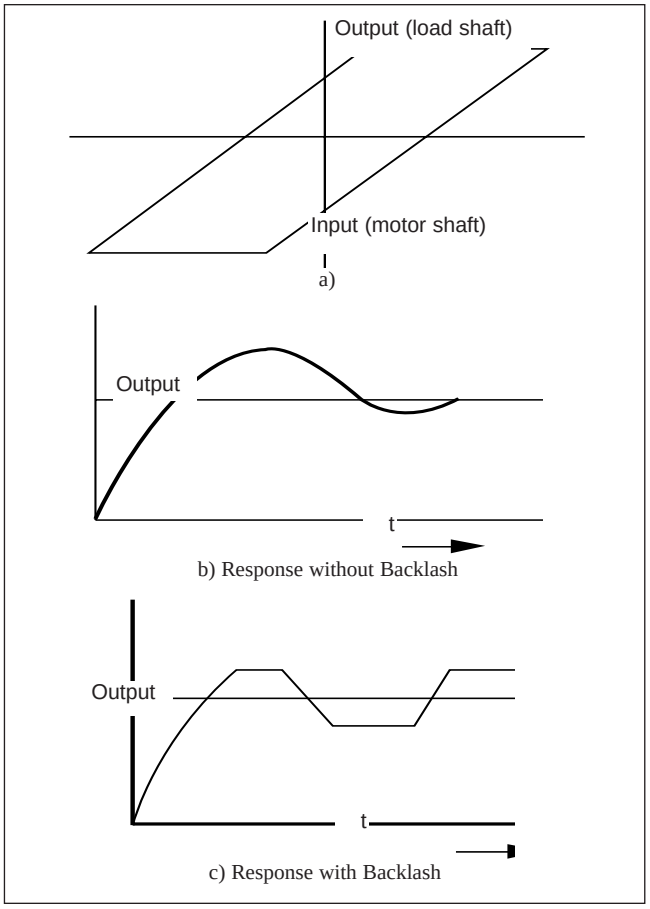

Figure 5

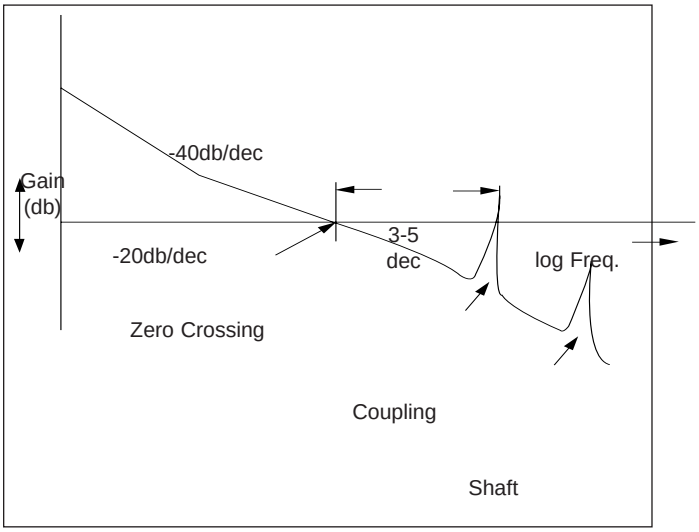

Figure 6
Typical Bode Plot of a Position Systems

providing the lowest acceleration torque and current.

Cost Advantages

The direct drive, brushless kit construction produces significant cost advantages. By eliminating the cost of bearings, housing, coupling, shafting and miscellaneous mechanical parts a more economical product is created, with increased reliability and servo performance.

Summary

By using the frameless, brushless kit approach, the result will be:

- Elimination of backlash - allows for higher system gain
- Elimination of long term degradation due to coupling wear.
- High stiffness
- Wider bandwidth
- More rapid response - higher throughput
- Lower cost

2. Sizing

The methods used to determine the size of a frameless motor for a particular application is no different from the methods used to size a housed motor i.e. evaluate the inertia, acceleration and deceleration, load torque, velocities, duty cycle, ambient temperature, while also considering the following:

2.1 Inertia

The rotor inertias listed in the catalog pages are the inertias of the relatively thin steel ring on which the magnets are bonded.

This rotor must be attached to the load shaft with an adapter sleeve, whose ID matches the OD of the shaft and whose OD matches the ID of the rotor assembly (see Section 3.2).

The attributes of this adapter (ID, OD, length and material) must be used when calculating the total motor inertia.

Figure 7 shows the total inertia for the various motor sizes, for either a steel or aluminum solid cylindrically shaped adapter.

Total inertia can be reduced by designing the adapter with an "I" cross-section or by having holes through the adapter, as shown in Figure 8.

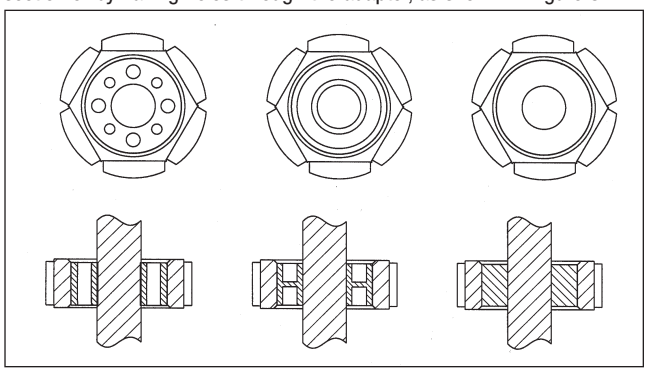

Figure 8

Engineering Reference

Frameless Application & Installation

Rotor Inertia vs. Rotor Length

K032

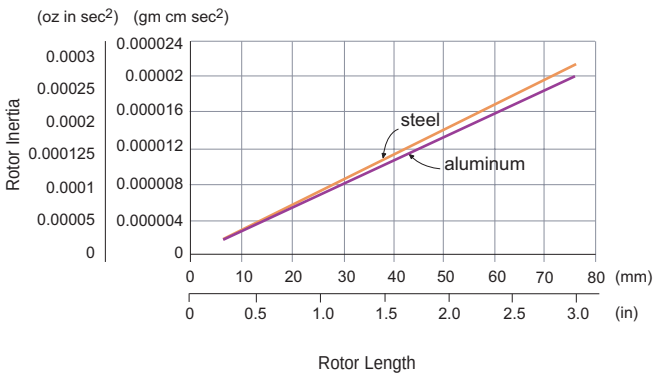

K044

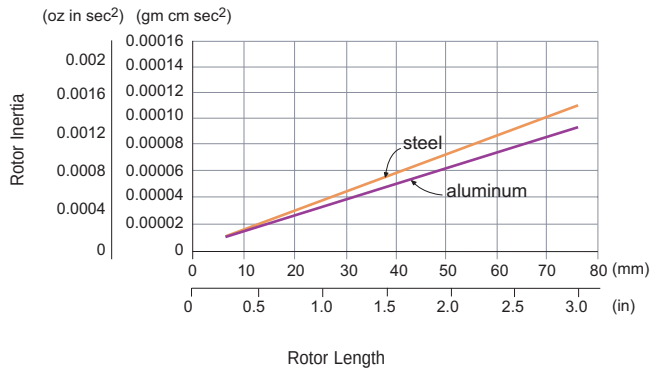

K064

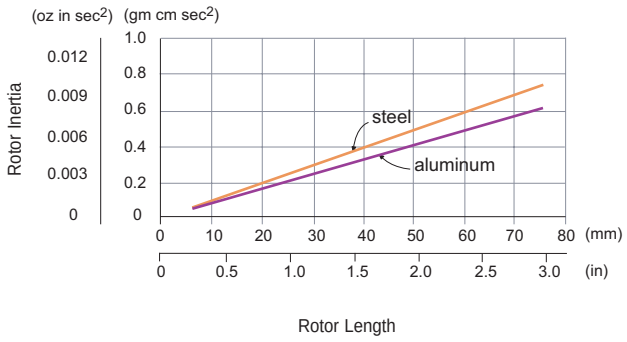

K089

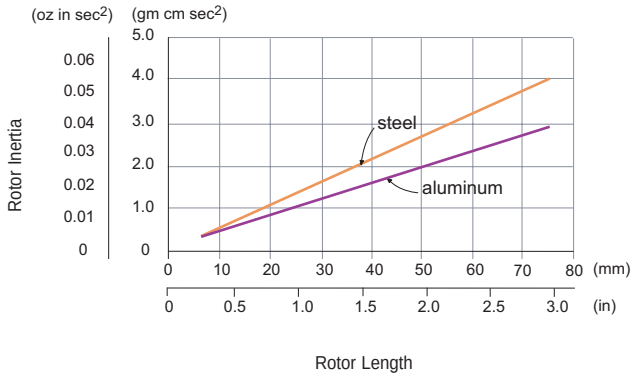

K375

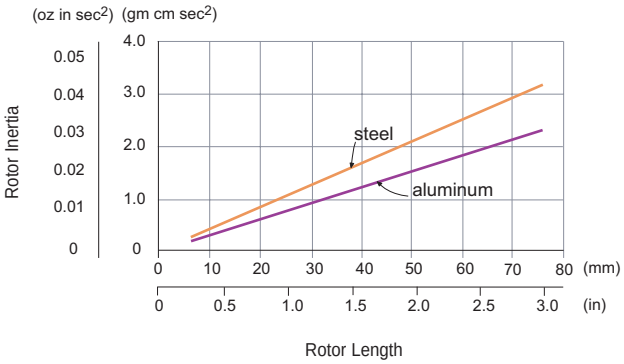

K127

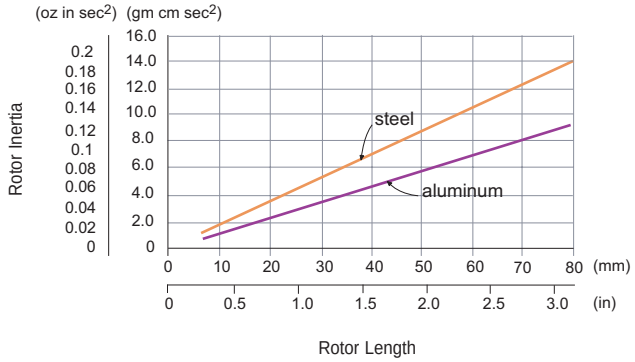

Figure 7

K500

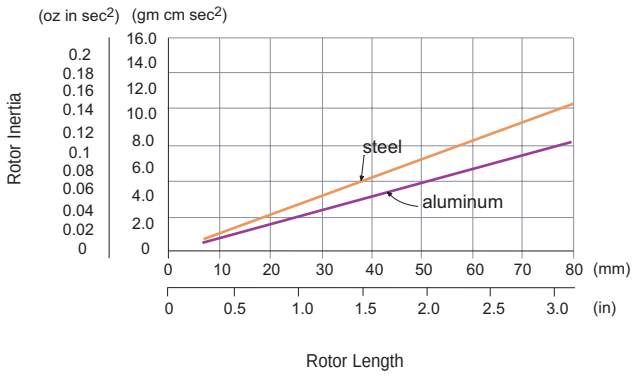

K178

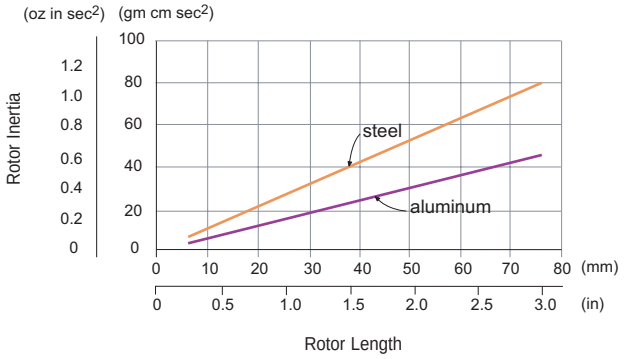

K700

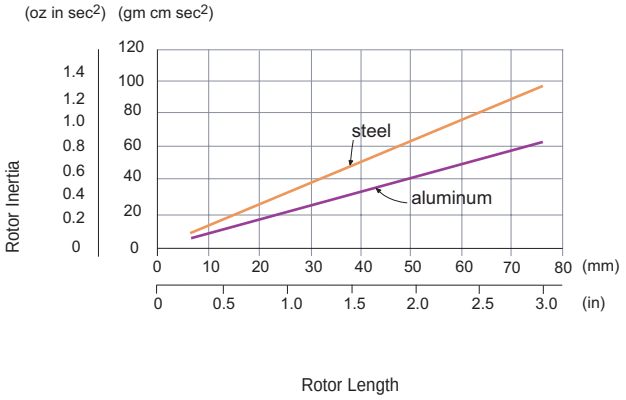

K254

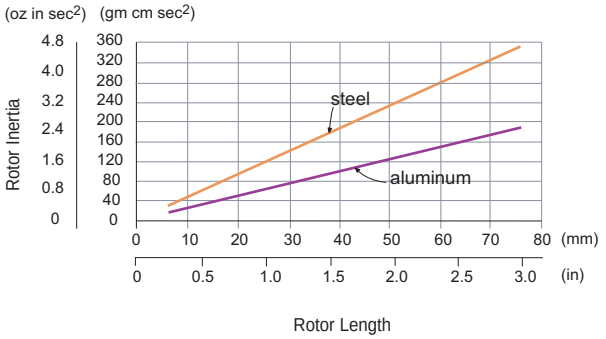

Figure 7 (Continued)

Engineering Reference

Frameless Application & Installation

2.2 Thermal Resistance

The thermal resistance of a typical housed motor is included as part of the catalog data (See BM, GM pages) and is well defined.

It is determined by mounting the motor on a defined "standard" test plate and performing dissipation/temperature rise tests.

The thermal resistance of a kit motor is determined by the thermal environment of the users product design. In many cases, the motor is "part of the machine" and has its' dissipation removed even more efficiently than the standard equivalent housed motor/mounting plate combination.

The thermal requirements and capability of the product should be considered early in the design to allow selection of the proper motor.

Thermal resistances for each motor size when housed in a typical aluminum cylinder and mounted to a “standard” test plate are listed in the catalog pages. These values can be reduced by using fins, forced air cooling, water cooling, etc.

For example, in a high speed application, by using water cooling, a K089-0.50 had its' thermal resistance lowered from 1.34 deg.C/watt to 0.81 deg.C/watt using a flow rate of 0.05 gal./min. and 0.74 deg.C/watt using a flow rate of 0.3 gal./min. with an inlet water temperature of 10 deg. C.

3. Mounting/Housing

This section outlines a number of methods that can be used to mount the stator and rotor assemblies in the product.

Which method to be used will largely depend on the product design, performance requirements (torque, velocity, temperature, etc.) and the manufacturing capabilities of the user.

Dimensioned drawings for all the kits are shown in the catalog pages.

3.1 Stator

The stator will be typically be mounted into a cylindrically shaped hole in the product (see Figure 9). It is recommended that a banking step be incorporated at the bottom of the hole to assure accurate and repeatable location of the stator.

Alternately, a non-ferrous "plug" could be used to provide a banking surface, which can be removed once the stator is fixed in place.

Figure 9 shows two methods for holding the stator in position; either with adhesive for a permanent assembly or with set screws for a removable assembly.

In designing the housing, be sure to provide a means for the stator lead wires (three) and the commutation Hall sensor PCB wires (five) to extend outside of the housing without interfering with the rotor / shaft assembly.

For volume production, a jig should be fabricated that will assure that the stator is located in the same position for each assembly. The yellow dot on the stator provides an index point for accomplishing this. This will eliminate the need to perform mechanical commutation alignment at final assembly (see Section 4.4).

3.2 Rotor

Except for the smaller motors (K032 and K044), the ID of the rotor will usually be larger than the shaft diameter.

An adapter sleeve will be required to allow mounting of the rotor to the shaft (see Figure 9).

The rotor / sleeve assembly must be positioned on the shaft such that the magnets are located in line with the stator assembly laminations. If the version in which the commutation PCB assembly is bonded to the end turns is being used, the commutation magnets must be located in proper proximity to the Hall sensors on the PCB. Figure 9 shows two methods for holding the rotor / sleeve on the shaft, either with adhesive or by using a spring pin and retaining ring.

When using the adhesive method, a shoulder should be provided on the shaft to properly locate the rotor/sleeve assembly.
When using the spring pin/retaining ring method, a slot must be provided in the sleeve that will engage the spring pin in the shaft, thus properly locating the rotor / sleeve assembly. During assembly, be sure that the pin and slot are fully engaged.

Note: The following adhesives are recommended for rotor and stator assembly (see Figure 9)

Loctite #325
Activator $7074
Loctite #609

3.3 Assembly

Stator Assembly:
Assemble stator in housing or sleeve (aluminum recommended) with the following locational clearances:

- Diameter to 127mm (5in) 0.025mm (0.001in) to 0.127mm (0.005in) diametrical clearance.
- Diameter over 127mm (5in) 0.05mm (0.002in) to 0.254mm (0.010in) diametrical clearance.

Do not force stator in position. This may damage or deform stator.

Permanent Assembly:
Secure stator with adhesive, Loctite#325 with activator#7074 or equivalent

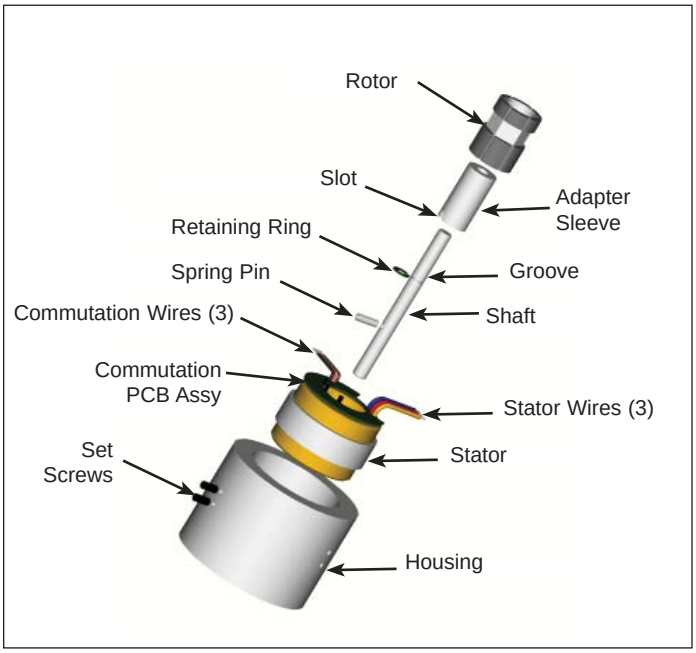

Spring Pin / Retaining Ring Method

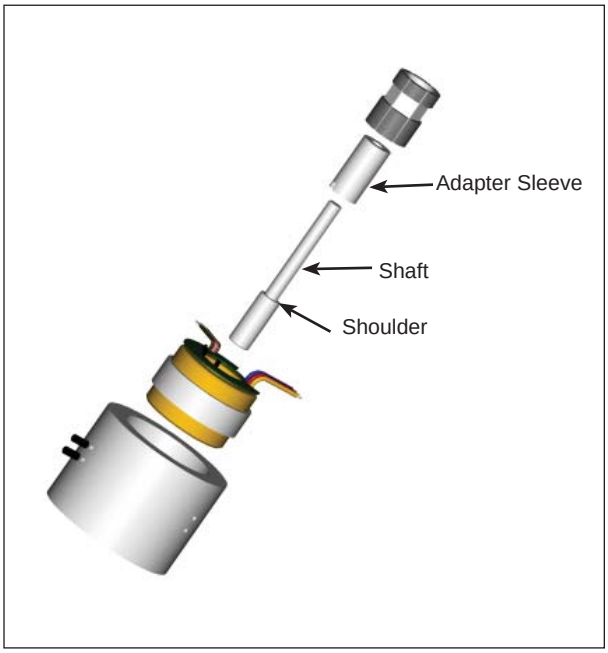

Shoulder / Adhesive Method

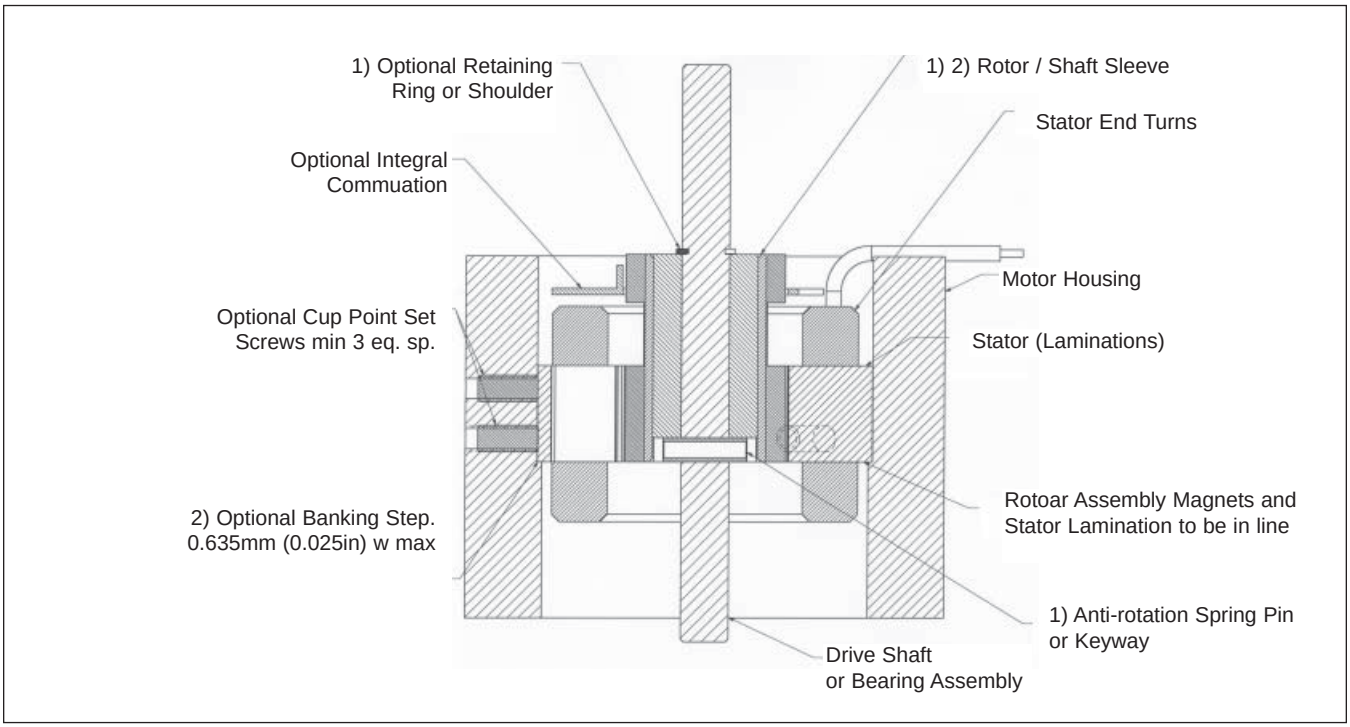

Figure 9

Removable Assembly:
Secure with cup point screws or setscrews thru housing into stator steel laminations only. Use a minimum of three (3) screws equally spaced about stator O.D. Tighten evenly.
Do not over torque screws.
This may damage or deform stator.

Rotor Assembly:
Assemble rotor to shaft with a locational clearance fit of 0.013mm (0.0005in) to 0.038mm (0.0015in) diametrical clearance.

Shoulder / Adhesive Method::
Fabricate shaft with shoulder. Secure rotor assembly and sleeve with adhesive. Loctite#609 or equivalent.

Spring Pin / Retaining Ring Method:
Fabricate a sleeve (steel or aluminum) with anti rotation spring pin groove.
Fabricate shaft to accept retaining ring and spring pin. Permanently bond to rotor assembly.

Final Assembly:
Rotor magnets to be in line with stator laminations and concentric to stator lamination I.D. within 0.127mm (0.005in) MAX.

Caution:
Rotor assembly magnets are powerful and fragile!
Do not place near magnetically sensitive material
Do not place near other ferromagnetic materials such as iron, steel and nickel alloys. Strong uncontrolled attraction may damage magnets on contact.
Improper assembly of rotor into stator can cause serious injury and or damage to equipment.

When assembling the rotor into the stator, high radial forces will be experienced, which can cause the magnets to "crash" into the stator and be damaged and / or cause bodily injury!

The following precautions should be taken:

- Wrap the rotor with a thin (0.005in thick) Mylar sleeve which will fill the air gap between the rotor and stator during assembly and can be easily removed when assembly is complete.

- Support the rotor and stator assemblies in a fixturing arrangement which will prevent radial motion while the two assemblies are being mated.

Example:
1. Hold the rotor / shaft / product assembly in a machine tool vise on the base of an arbor press.
2. Fasten the stator assembly to the vertical moving member of the arbor press, away from the stator.
3. Slowly lower the stator assembly around the rotor / shaft / product assembly.
4. Tighten all fasteners to complete assembly.
5. Remove Mylar shim and check for rotational clearance.

4. Commutation Sensing and Implementation

The commutation method to be used will depend to a large extent on the type of amplifier used to drive the motor. This section outlines a number of these with a brief discussion of their suitability for various applications.

In all cases, the position of the shaft is sensed and fed back to the amplifier in order to commutate the current in the stator windings to produce continuous rotational torque.

4.1 Hall Sensors

The most basic commutation sensing is by means of three Hall sensors mounted on a PCB, which is bonded to the stator end turns during stator manufacturing. The PCB is aligned during assembly and therefore no adjustment is required by the customer.

If only Hall sensors are used, the drive will be 6 step and the velocity can also be controlled using the Hall signals as velocity feedback.

This implementation is satisfactory for velocity systems operating above approximately 100 to 500 RPM, depending on the load inertia and the required velocity ripple.

4.2 Encoder/Commutation Sensing

Encoders are available with both the normal A, B, Index tracks plus three commutation tracks, which provide the same information as Hall sensors.

If this is used, the stator hall sensor PCB is not required.

Depending on the amplifier used, the mounting for the encoder body may have to be designed to allow for limited rotational motion in order to align the commutation signals with the motor BEMF waveforms.

If the amplifier has the ability to perform a "logical software adjustment" (available in many digital amplifiers) the encoder does not have to be made adjustable.

Some amplifiers will auto-adjust if the pole count is entered into memory, in which case an encoder with only the A, B, Index signals can be used.

This implementation is satisfactory for both position and velocity systems. It allows for sine wave commutation, producing virtually zero torque ripple and positioning to the accuracy provided by the encoder resolution.

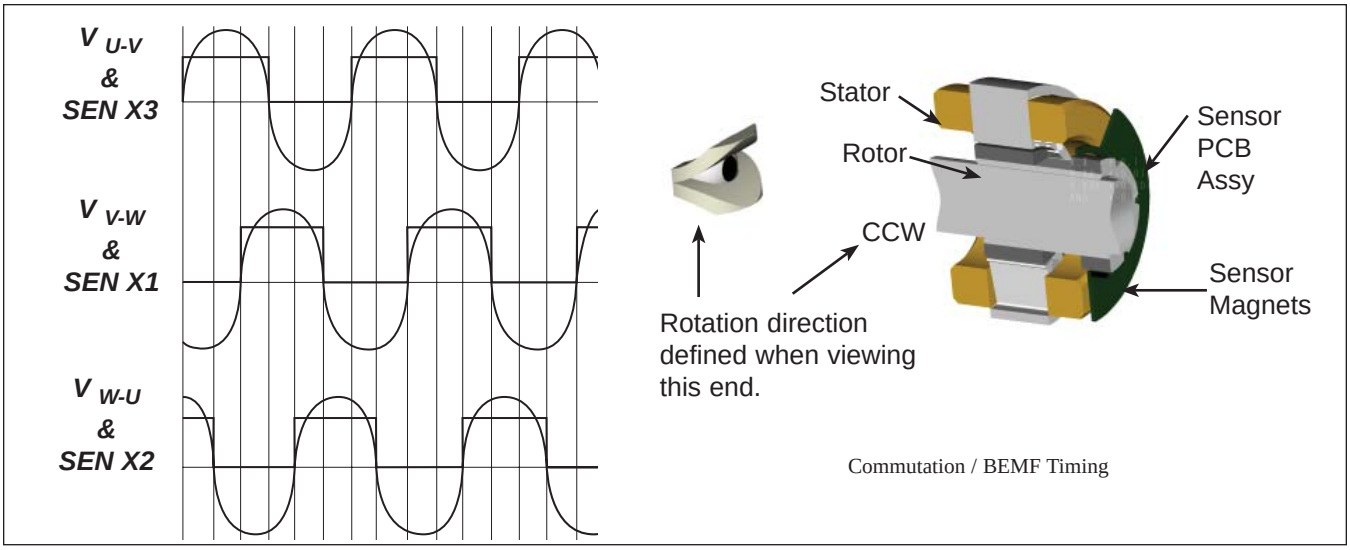

Figure 10

4.3 Resolver Sensing

A resolver can be used in place of an encoder and the resolver body must or must not be adjustable, depending on the type of amplifier being used. The amplifier, of course, must be resolver compatible, i.e. it must be capable of powering the resolver and converting the resolver signals into digital information via a R to D converter circuit.

4.4 Timing Waveshapes

If commutation sensing is used with an amplifier requiring the commutation signals to be adjusted at the motor, Figure 10 shows the relative timing of the three commutation signals with respect to the BEMF waveshapes generated by the stator. Figure 11 shows a connection diagram for making these measurements.

In order to perform this measurement / adjustment, it will be necessary to drive the motor assembly as a generator with a second motor coupled shaft-to-shaft and a dual trace oscilloscope used to observe the various signals.

See section 3.1 for suggestions with respect to the mounting of the stator to minimize the need for this adjustment.

Also, even if an amplifier is used which is software adjustable, interchangeability can only be assured if the sensing device, encoder or resolver, is mounted in the same angular position on each motor.

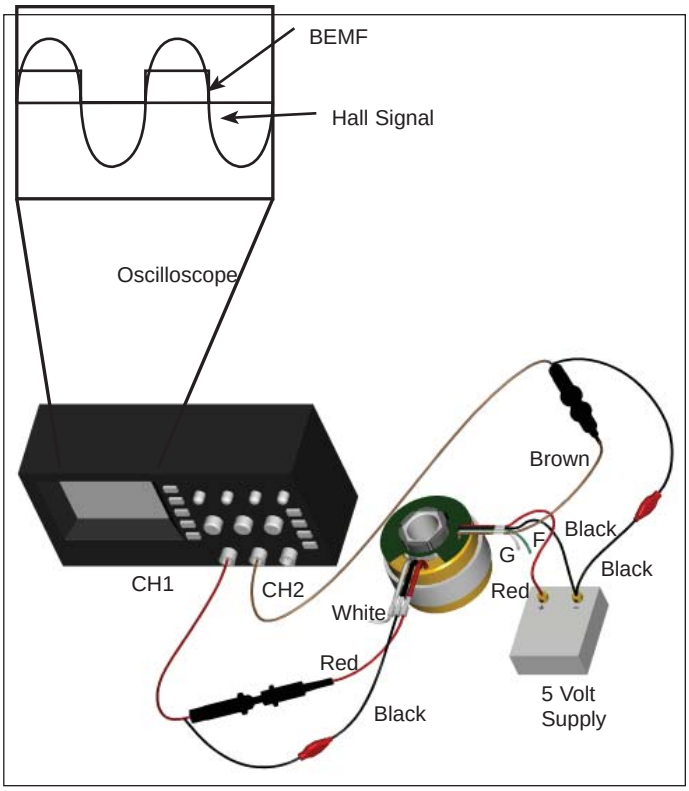

Connections for Measuring BEMF / Hall Signal Timing (Shown for Phase X-Y)
Figure 11

Sensor Leads	
SEN 3	Brown
SEN 2	White
SEN 1	Green
+ 5 Volt	Red
Ground	Black

Engineering Reference

Servo Motor & Drive Theory of Operation

Table of Contents

1.0 Introduction 305

2.0 Motor Operation 305

- 2.1 Basic
- 2.2 Torque / Commutation
- 2.3 The DC Brushless Motor
- 2.4 Brushless Motor Constants
  - 2.4.1 Resistance and Inductance
  - 2.4.2 Voltage Constant
  - 2.4.3 Torque Constant
  - 2.4.4 The K_E / K_T Relationship
  - 2.4.5 The Motor Constant
  - 2.4.6 Core / Velocity Losses
- 2.5 The Electrical Circuit
- 2.6 The Speed / Torque Curve-Nominal
- 2.7 Thermal Resistance-Temperature Rise
- 2.8 Speed / Torque Curve-Final

3.0 Amplifier Operation 311

- 3.1 Brushless Commutation
- 3.2 Three Phase Commutation
  - 3.2.2 Sine Wave Commutation
- 3.4 PWM
- 3.5 The Digital Amplifier

4.0 Controller Operation 314

- 4.1 General
- 4.2 Variable Features
- 4.3 Stabilization Capability
  - 4.3.1 Proportional Gain P
  - 4.3.2 Derivative Gain D
  - 4.3.3 Integral Gain I

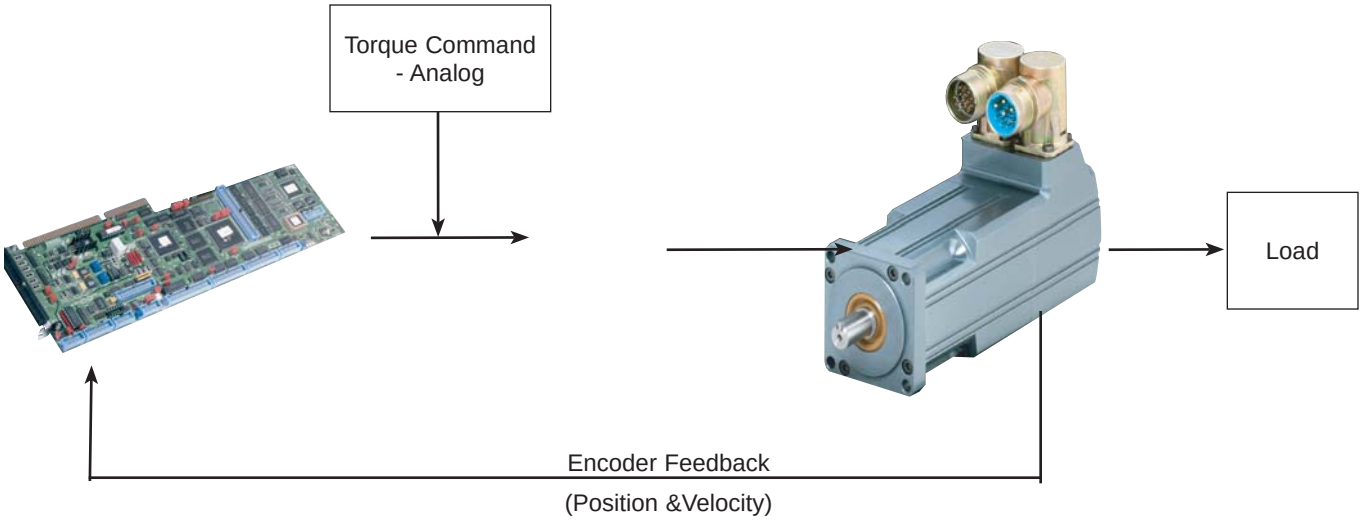

1.0 Introduction

A basic motion control system (single axis) consists of three main components:

- Motor and Load
- Amplifier
- Controller

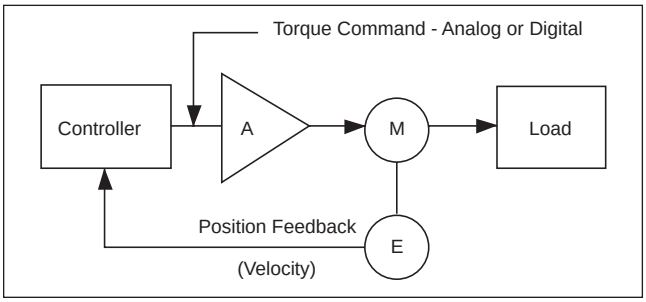

The motor drives the load at required accelerations and velocities, either directly or through a gearhead or lead screw and supplies position and velocity feedback to the controller via an encoder or resolver.

The amplifier accepts low level torque or velocity commands from the controller and outputs current and voltage at the required power level to the motor.

The controller accepts commands from the host system, receives the feedback, interprets this information and issues torque or velocity commands to the amplifier in order to accomplish the movement of the load required by the host.

An understanding of the fundamentals of the operation and characteristic of each of the main components is useful in order to properly select them for particular performance requirements.

The following sections provide this information. See the Motor/ Amplifier Section for a procedure that should be followed to properly size and select the components.

2. Motor Operation

2.1 Basics

The basic operation of any motor is the result of two fundamental electromagnetic principles:

- When a current is passed through a conductor located in a magnetic field, a force is exerted on the conductor.
- When a force is applied to a conductor located in a magnetic field causing it to move, a voltage is induced in the conductor.

These two effects occur simultaneously in any motor, i.e. if current is applied to the conductor, the resulting force will cause the conductor to move, which motion will, in turn, cause a voltage to develop in the conductor. This voltage is known as BEMF (back electromotive force).

The first principle is illustrated in Figure 1, which shows the conductor moving at right angles to the magnetic field.
Note that the conductor moves by virtue of the magnets being held

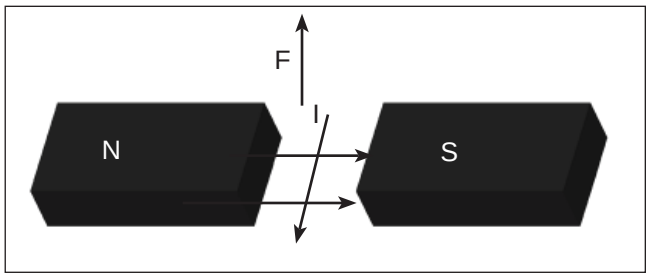

Figure 1

stationary. If the conductor were held stationary, then the magnets would move, which as we shall see, is the case in brushless motors.

The force developed is a function of the magnetic field strength, the current magnitude and the length of the conductor, or:

$F = Bli$ B = field strength
l = conductor length
i = current magnitude

The second principle is illustrated in Figure 2, which shows the polarity of the induced voltage resulting from moving the conductor at right angles to the magnetic field.
Similarly, if the conductor were stationary and the magnets moved, the

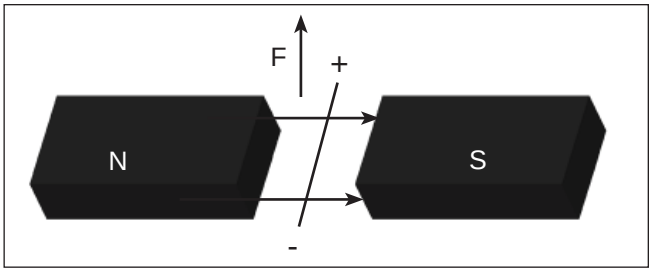

Figure 2

voltage would also be created.

The voltage developed is a function of the magnetic field strength, the velocity of the conductor and the length of the conductor, or:

$E = Blv$ B = field strength
l = conductor length
v = conductor velocity

Engineering Reference

Servo Motor & Drive Theory of Operation

2.2 Torque/Commutation

By connecting the conductor through a lever arm to a point of rotation (Figure 3), a torque can be created.

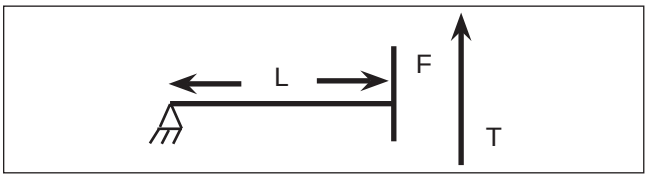

Figure 3

Where T = FL, with F at right angles to L.

In general, however, as rotation occurs, F will not remain at right angles to L and the force producing the torque will be proportional to the cosine of the angle of rotation, or:

$$T = FL \cos\theta$$

Next, consider a coil with two sides located in the same magnetic field and free to rotate around an axis, as shown in Figure 4.

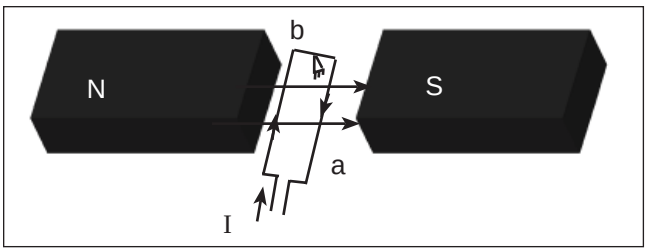

Figure 4

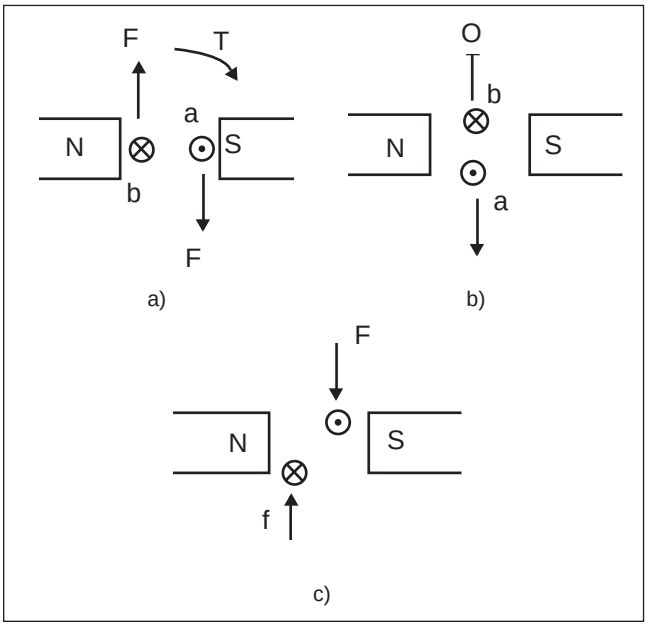

Figure 4 a, b, c

By passing the same current through conductors (a) and (b), they will experience equal forces, but in opposite directions, as shown in Figure 4a.

These forces will create a torque, causing the coil to rotate CW. However, as the coil rotates, the torque will decrease, due to the cosine θ effect, until at a 90 degree position the torque falls to zero (Figure 4b).

However, if we assume that momentum will take the coil slightly past dead center, and at that time we reverse the current in the coil, then a CW torque will continue to be developed (Figure 4c). With this single coil, the torque will have the magnitude of a rectified sine wave, with resulting high ripple content.

Thus, by reversing the coil current at the appropriate shaft position, a torque will be created that will keep the coil rotating as long as current is applied.

Note that if we locate additional coils at various angles to the first, they would each develop maximum and minimum torque at different positions and the total torque would be the sum of all these torques, with much lower torque ripple. The reversal of current through the coil at the appropriate position of the coil with respect to the magnetic field is called:

Commutation

Commutation has traditionally been accomplished by means of carbon brushes riding on a segmented conductive assembly (the commutation bars) which is connected to the various motor coils, as shown in Figure 5

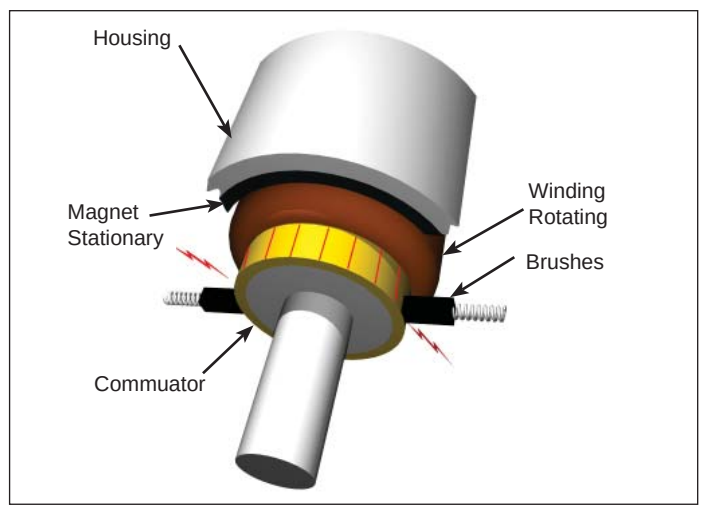

Figure 5

This type of mechanical commutation has deficiencies that limit the performance of "brush" motors. The brush/commutator bar interface is subject to wear, produces RFI / EMI problems, requires contouring the brush face, has variable and random voltage drop effects and can have bar oxidation problems. For servo operation, maximum speed is typically limited to 2,000 to 4,000 RPM. The heat generated in the rotating coils is difficult to remove, since its main path to ambient is via the bearing structure.

2.3 The DC Brushless Motor

In section 2.2 it was shown that torque is developed by relative interaction between current in a coil and a magnetic field.

This means that torque can be created with either of these parameters remaining fixed and allowing the other to rotate.

If we hold the coils stationary, **(the stator)**, and allow the magnets to rotate, **(the rotor)**, we have created what is called a brushless DC motor. It it called brushless only because the magnetic field of the rotor is constant and therefore not varied or reversed. However, the current in the coils, even though they are stationary, must still be reversed, in order to produce torque (see Figure 6).

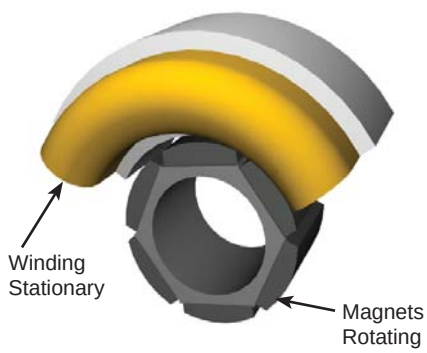

Figure 6

In the brushless DC motor, this current reversal (commutation) is accomplished by electronic circuits and power devices instead of mechanically as in the brush motor.

Brushless motor commutation is still accomplished by means of sensing shaft position.

Commutation bars, as they rotate in a brush motor, are actually "sensing" shaft position and reversing coil current at the appropriate shaft position.

Therefore, a rotary machine with a permanent magnet rotor and a stationary coil stator is:

- A DC brushless motor if commutation occurs as a function of shaft position.
- An AC brushless motor if commutation occurs as a function of the frequency of the applied current.

There are various methods and circuit topologies used to commutate and control the brushless DC motor, which are described in sections 3 and 4.

2.4. Brushless Motor Constants

2.4.1 Resistance and Inductance - R & L

Since the stator coils are wound on a steel laminated structure, they have the typical parameters of any inductive device, namely:

- Resistance R
- Inductance L

As mentioned in section 2, one factor contributing to the force, and therefore the torque, generated by the motor, is the length of the conductors in the coil.

In an actual motor, this translates into the number of turns in the coil. Since both R and L are proportional to the number of turns (R directly and L to the square), these parameters can range over large values for different coil designs for any motor frame size and stator length.

(See the various stator charts in the frameless section of this catalog).

2.4.2 Voltage Constant K_E

In section 2 it was shown that a conductor (coil) moving in a magnetic field will have a voltage induced in it.

If the coil is moving in a circular motion, then the induced voltage will be sinusoidal, analogous to the sinusoidal torque described in section 2.

Since the voltage is proportional to:

- the field strength
- the coil length (number of turns)
- the lever arm length (the motor diameter)
- the coil velocity (RPM)

then for any motor, if the first three parameters are fixed, a constant can be measured which is proportional to the motor velocity.

This is the voltage constant: K_E

expressed as: volts / 1,000 RPM or volts / rad ./ sec.

It is measured by driving the motor as a generator with a second motor and measuring the output voltage at a known speed.

2.4.3 Torque Constant K_T

In section 2 it was shown that a conductor (coil) in a magnetic field with a current flowing through it will experience a force, producing a torque.

Since the torque is proportional to:

- the field strength
- the coil length; number of turns
- the lever arm length; the motor diameter
- the magnitude of current

then for any motor, if the first three parameters are fixed, a constant can be measured which is proportional to the applied current.

This is the torque constant K_T

expressed as: oz in / amp or Nm / amp

It can be measured by connecting the motor to a calibrated loading device, such as a dynamometer, and measuring the torque produced by a known current.

2.4.4 The K_E/K_T Relationship

Since both of these constants are proportional to the same motor parameters, they are essentially two ways of measuring motor operation in a reciprocal relationship.

In English units: K_T in (oz in /amp) = 1.35 K_E in (volts / 1,000 RPM)

In Metric units: K_T in (Nm / amp.) = K_E in (volts / rad /sec)

Since K_E is the easier of the two to measure, K_T is typically derived from a K_E measurement.

Note that since K_E is measured open circuit (i.e. no current flowing through the stator) the K_T derived from it is also a "no load" value.

When the motor actually drives a load, the current flowing through the stator causes saturation effects to take place and both K_T and K_E decrease. In a well designed motor this decrease will usually be less than 10% at the maximum continuous torque rating of the motor.

However, as current is further increased, in an attempt to create high peak torques, K_T drops more rapidly and eventually further current increases create only small torque increases.

Rare earth based motors will typically have peak torque ratings of 3 to 5 times their continuous torque rating, based on thermal limitations, within which range the K_T will typically be 85% to 90% of the no load value.

2. 4.5 The Motor Constant K_M

When current is being supplied to the motor, the coils will experience heating due to their resistance (I^2R dissipation).

For the special condition of the motor in stall, this current will produce a certain stall (non-rotating) torque proportional to the current.

Note that since the motor is not rotating, no output power is produced, only torque.

Under these conditions, a constant which relates the input power (I^2R) to the output torque, can be defined as:

$$K_M = T / \sqrt{W} \quad \text{oz in} / \sqrt{\text{watts}}$$

Although this constant was originally created with respect to so called "torquers", which operate at stall or at very low speeds, it is useful in determining motor efficiency and comparing various motors to each other.

However, it must be considered together with a motors thermal capability to determine true efficiency and capacity (see section 6).

2.4.6 Core/Velocity Losses

As the magnets rotate, their flux induces currents in the iron structure of the stator coils, leading to I^2R losses in this iron. In addition, there are hysteresis losses. These losses are similar to those in a transformer.

These losses are supported by an additional amount of current that must be supplied. In addition, they contribute to the motor dissipation, which lowers the capability of the motor to produce output torque.

These core losses can be measured and will typically have an exponential rise with increased velocity. They depend on the nature of the stator iron, the air gap between the rotor and stator, the lamination design, etc.

Typically, core losses, P_C, are stated as watts at 1000 RPM and the core losses at any other speed are expressed as an exponential function of P_C and speed, or:

$$P_N = P_C N^X \qquad \text{(N = speed in KRPM)}$$

where X can range from 1.2 to 2.5. Bayside motors are rated for core losses with X = 1.5, or:

$$P_N = P_C N^{1.5}$$

2.5 The Electrical Circuit

A simplified equivalent stator electrical circuit powered by a voltage is shown in Figure 7

$R_{core} = K_E / P_C\sqrt{N}$ is an equivalent resistor representing core losses.

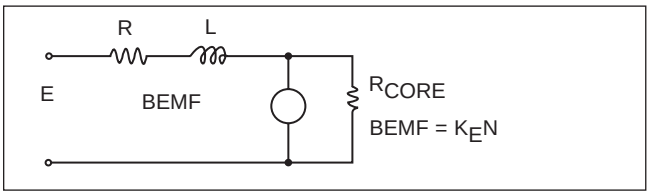

Figure 7

For a good initial approximation, ignore R_{core}, which results in a simple series circuit, as shown in Figure 8
where $E(t) = i(t)R + i(t)sL + K_E N$

and in the steady state: $E = IR + K_E N$

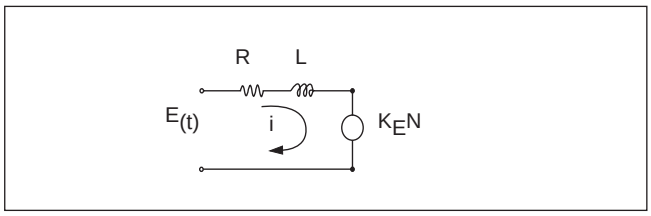

Figure 8

The current (I) will be determined by the load torque, since :
$I = T / K_T$

Therefore, for any load (T) and applied voltage (E), the velocity (N) will become a value such that this equation is balanced.

For the two extremes of I = 0 (no load) and N = 0 (stall):

for I = 0 : $N = E / K_E$ = no load speed

Bearing, windage and core losses will make N less than this value.

for N = 0 : $I = E / R$ = stall current

Actual stall current for a particular E will depend on the actual temperature of R.

2.6 The Speed/Torque Curve - Nominal

Substituting T / K_T for I and solving for N give: :

$$N = E / K_E - RT / K_T K_E$$

which is the equation of a straight line, with T as the independent variable and N as the dependent variable.

A plot of this equation, called The Speed / Torque Curve, is shown in Figure 9

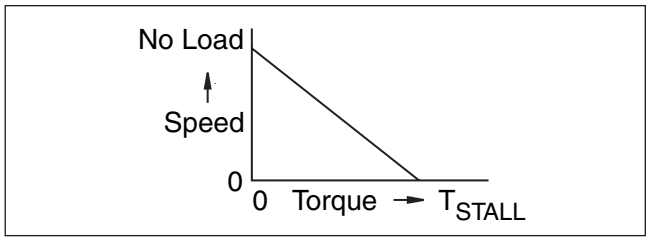

Figure 9

Note that this curve is only for a particular value of E and also does not show time variation. Parallel curves will be created for different values

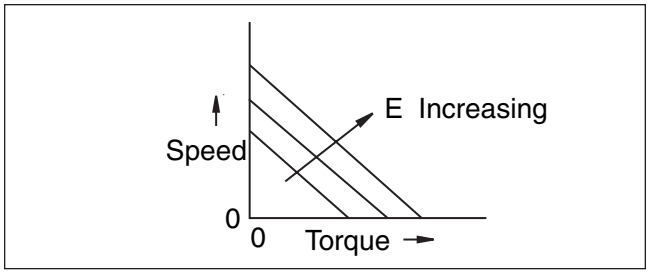

Figure 10

of E (see Figure 10).

In addition, up to this point, the Speed / Torque curve does not show any information with regard to the temperature of the motor. The final Speed / Torque curve is shown in section 2.8, where temperature effects are considered.

2.7. Thermal Resistance - Temperature Rise

The two main effects which cause motor dissipation are the I^2R losses in the stator coils and the core losses.

There are secondary additional effects which are described in the Amplifier / Controller section.

This dissipation results in the stator coil having a temperature rise above the ambient temperature in which the motor is operating.

Typically, due to limitations of the coil insulation, the stator temperature must not exceed 155 °C. In order to calculate the temperature rise and avoid over-heating the motor in any particular application, a parameter called the Thermal Resistance is measured. The units of thermal resistance are:

$$\Theta = °.C / watt$$

which expresses the stator temperature rise above the ambient under controlled conditions. Therefore:

$$t_{wdg} = \Theta W + t_{amb}$$

Where W is the total dissipation in watts

The thermal resistance is a function of the motor mechanical design and size and the thermal properties of the surface to which it is mounted. Note that typical thermal resistance testing is performed with the motor mounted to a square vertical plate of a pseudo-standard dimension. Aluminum plates 6" x 6", 10" x 10", 12" x 12" and 16" x 16" are being used.

When comparing thermal properties of different motors, be careful to determine the size of the test plate that was used in order to make a true comparison. For example, a 10" x 10" plate has almost 3 times the surface area of a 6" x 6" plate.

If the thermal equation is solved for the dissipation (W):

$$W = (t_{wdg} - t_{amb})/\Theta = (155 - t_{amb})/\Theta$$

it is obvious that W, which is a measure of the current (and therefore the torque) allowable is determined by the ambient temperature and the thermal resistance.

Obviously, if t_{amb} = 155 °C, the motor output drops to zero, and if Θ can be reduced (by forced air or water cooling), the motor output can be increased.

Since the majority of the dissipation is due to I^2R, the fall-off of available torque is exponential, dropping slowly at first and more rapidly as t_{amb} approaches 155 °C.
according to:

$$T = \sqrt{(155-t_{amb})/\Theta R} \quad \text{(see Figure 11)}$$

Note that R is a function of temperature and at 155 °C is 1.5 times its 25 °C value.

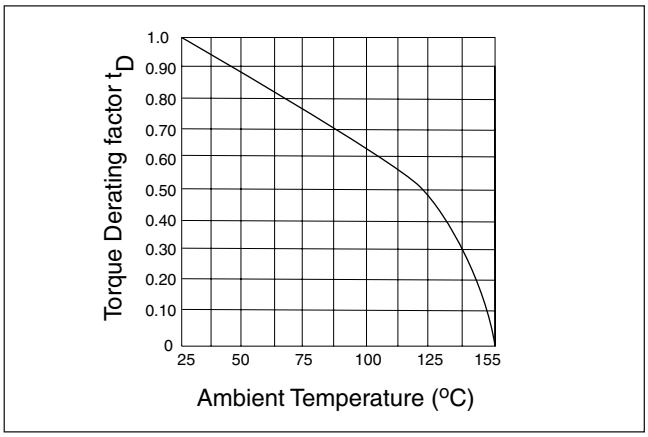

Figure 11

2.8 Speed/Torque Curve - Final

Since the motor has both I^2R and core losses, the amount of torque available at any speed is determined as follows:

2.8.1 Calculate the total dissipation allowable from:

$$W = (155 - t_{amb})/\Theta$$

2.8.2 Calculate the core losses at the speed in question

2.8.3 Subtract 2.8.2 from 2.8.1, giving the dissipation available for I^2R

Note: Since the value of R can vary from the 25 °C value to the 155 °C value, depending on the final temperature determined by the velocity profile, it is best to use the 155 °C value (which is 1.5 times the 25 deg C) value and create a safety margin.

2.8.4 From 2.8.3, calculate I and then T.

Using this procedure, together with the speed / torque curve of section 6, two curves can be plotted (see Figure 12).

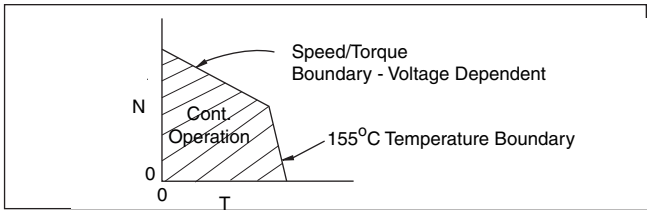

Figure 12

As long as the motor is operated within the continuous operation area, the stator temperature will not exceed 155 °C.

If there were no core losses, the 155 °C temperature boundary would be a vertical line.

The motor can operated outside of the continuous operation area, but only on an intermittent basis, determined by its thermal time constant and the amount of additional dissipation being experienced and only if the RMS dissipation (calculated as shown in the Motors and Drives Section) is within the continuous area.

A typical total Speed / Torque curve will then be as shown in Figure 13.

Actually, this is no longer truly a speed / torque curve but would more correctly be called a speed / torque zone of operation.

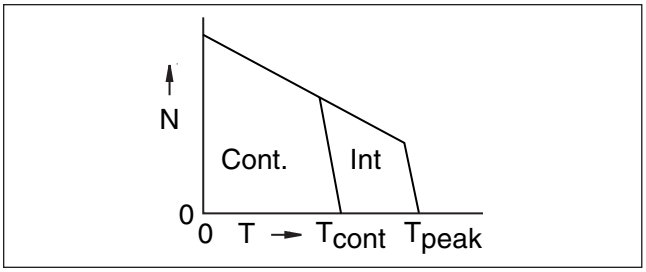

Figure 13

3.0 Amplifier Operation

Since a brush motor commutates mechanically, the amplifier need only supply variable voltage and current in order to drive the motor through its full range of speed and torque.

In a brushless motor, the amplifier has two functions:

- It creates the commutation
- It supplies variable voltage and current

performing both of these functions simultaneously.

3.1 Brushless Commutation

A simple method of reversing current in a coil, when operating from a unipolar power supply is shown in Figure 14

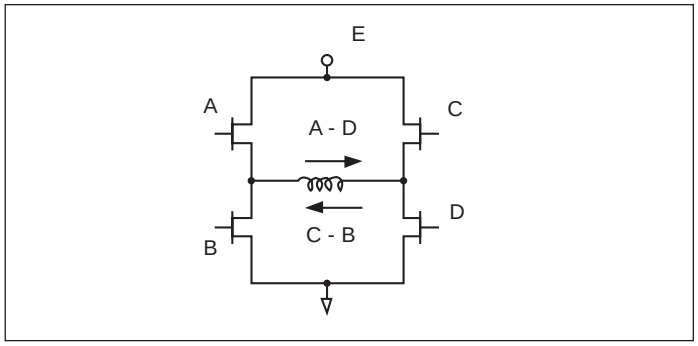

Figure 14

This circuit is called an "H" bridge, and is made up of two half bridges (A + B and C + D). Direction of current flow is determined by which opposite pair of power transistors are on:

- If A and D are "on", current flows from left to right
- If C and B are "on", current flows from right to left

As stated in the Motor Operation section, in order to provide continuous, low torque ripple, a motor will have more than one set (or phases) of coils. For each coil phase, a separate means of commutation must be provided, since each phase is commutated at a different shaft position.

For example, for a two phase motor, Figure 14 can be expanded to the circuit in Figure 15.

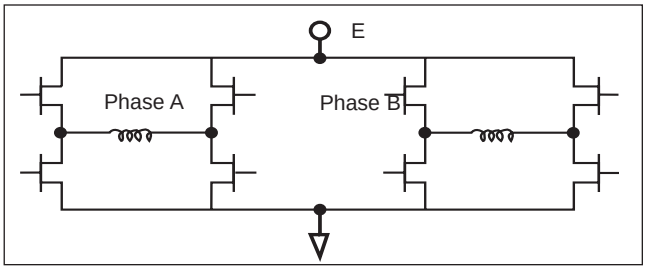

Figure 15

By further extension, a three phase motor could be commutated as shown in Figure 16

Note, however, that as the number of phases increases, the number of power devices also increases, rapidly increasing the cost and complexity of the amplifier.

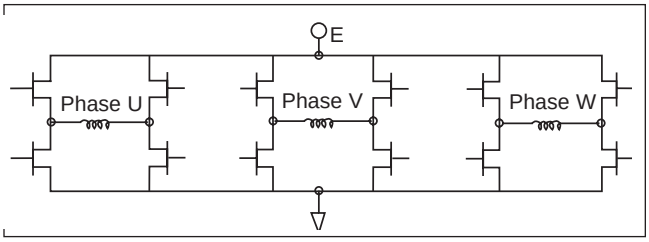

Figure 16

3.2 Three Phase Commutation

The practical implementation for commutation involves the realization that a three phase topology can be created with three half bridges, as shown in Figure 17

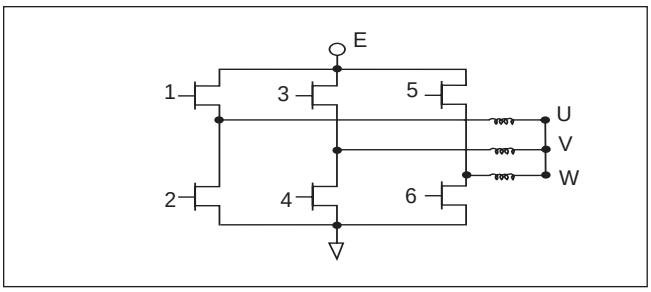

Figure 17

This configuration reduces the number of power devices from 12 to six, and can provide simple control with acceptable torque ripple or optimum control with zero torque ripple, as follows.

3.2.1 Six - Step Commutation

Power to the three motor phases (X, Y, Z) can be controlled and reversed (commutated) by turning on one upper and one lower transistor in the sequence as shown in the following table:

Since the complete sequence of coil excitations consist of six repeating combinations, it is referred to as "Six Step Control".

Note that each phase is excited for four of the six steps, and only two of the phases are excited at any one time. The effect on the torque capability is discussed later in this section.

In order to enable the six transistors in this sequence, three shaft position sensors are required whose signals can be decoded as shown in Figure 18.

As reviewed in the Motor Operation section, the total torque developed is the sum of the torques in the individual phases.

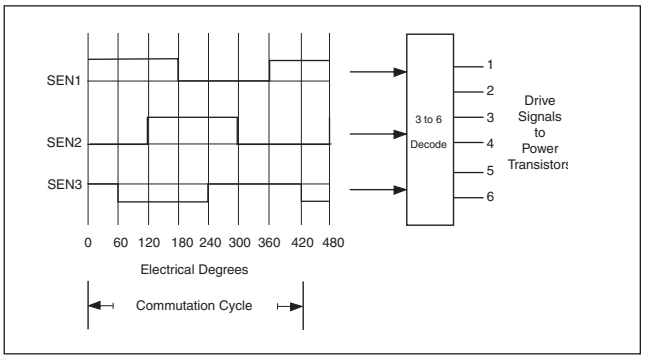

Figure 18

Since a complete commutation cycle of 360 electrical degrees occurs in a six step sequence, each step occurs in 60 electrical degrees. That is, every 60 electrical degrees, the current switches from one phase pair to another phase pair as shown in the previous timing table.

Since the BEMF generated in each phase is sinusoidal and the voltage applied is DC, Figure 19 shows the result. It can be shown that the torque ripple created in this type of drive has a peak-to-peak value of 13%.

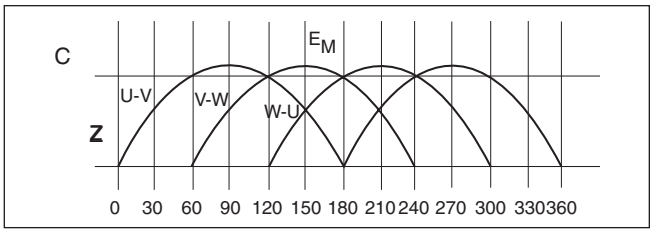

Figure 19

Transistor						Current Flow		
___1	2	3	4	5	6	Phase U	Phase V	Phase W
on	off	off	on	off	off	0	←	→
on	off	off	off	off	on	←	0	→
off	off	on	off	off	on	←	→	0
off	on	on	off	off	off	0	→	←
off	on	off	off	on	off	→	0	←
off	off	off	on	on	off	→	←	0

Note that this ripple is created by the amplifier driving the motor. But a motor / amplifier combination is typically operated in a system with velocity feedback. If the commutation frequency is well within the bandwidth of the velocity loop, this ripple will be reduced by the action of the feedback to maintain the velocity, i.e. "smooth out" the velocity.

In addition, depending on the velocity and inertia, the inertia will also "smooth out" the effect of this torque ripple.

3.2.2 Sine Wave Commutation

Instead of commutating the phases in six steps, all three phases can be excited simultaneously with sine waves that are 120 electrical degrees out of phase with each other.

This can be accomplished by adding a shaft encoder to the system, with reasonably high resolution (512, 1,024, 1,000, 2,000 etc. PPR) and creating a sine wave "look-up' table which generates three sine waves as shown in Figure 20
Since the applied voltage and the BEMF (and therefore the magnetic field) are both sinusoidal, the torque in each phase, being the product of these two terms, is proportional to $\sin^2$.

Since the torques are 120 electrical degrees apart, the total torque is

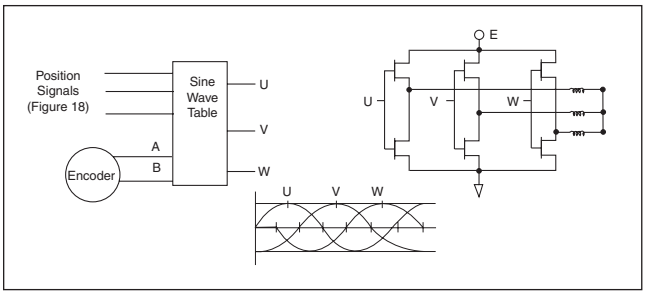

Figure 20

the sum of the three torques, or:

$$T_X \propto \sin^2\Theta$$
$$T_Y \propto \sin^2 (\Theta + 120)$$
$$T_Z \propto \sin^2 (\Theta + 240)$$

$$T_{total} \quad \sin^2\Theta + \sin^2 (\Theta + 120) + \sin^2 (\Theta + 240)$$

The trigonometric sum can be shown to equal:

$$1.5 (\sin^2\Theta + \cos^2\Theta) = 1.5$$

resulting in a constant torque with no ripple component.

Since the generated sine waves from the amplifier and the magnetic field sine waves are not perfect, some ripple will actually be experienced, which again will be reduced by a tight velocity loop and the load inertia.

3.4 PWM

Due to its high efficiency and small size, the amplifier of choice for brushless motors is the PWM type of amplifier.

PWM stands for:

- P = pulse
- W = width
- M = modulation

Pulse Width Modulation

The PWM amplifier operates by supplying the motor with high frequency pulses (typically 15 KHz to 35 KHz) whose width is proportional to the required power level as determined by the input command.

These amplifiers typically operate in a transconductance mode, i.e. the gain is expressed as amps./volt, with an input voltage ranging linearly from -10 to +10 volts, creating output current of $-I_{max}$ to $+I_{max}$.

At zero input command, the output will have a 50 / 50 duty cycle, which at the high PWM switching frequency, results in zero net torque. In addition, this form of operation results in zero deadband.

Since the power transistors are either completely "on" or "off", they experience dissipation only while they are switching or when they are "on" with very low voltage drop, resulting in an efficiency of 85% to 95%.

In either six-step or sine wave amplifiers, the PWM operation functions simultaneously with the commutation logic, resulting in the drive signals consisting of a pulse train, with the pulse widths being proportional to the input command.

The result is phase currents as shown in Figure 21.

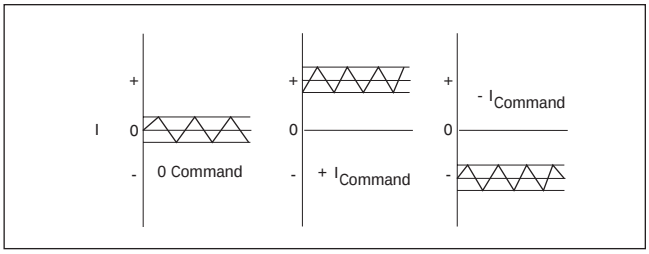

Figure 21

Note that a high frequency ripple current exists at all times, even when the input command is zero. The magnitude of this ripple current is proportional to the PWM frequency, the motor electrical time constant, the winding resistance and the supply voltage.

This ripple current introduces an additional source of I^2R heating. The result will be motor heating even with an input command of zero and with the motor at a standstill.

In high speed applications, motors will typically have low inductance and resistance, resulting in high PWM ripple, sometimes causing the ripple dissipation to be greater than the copper losses and core losses created by the load requirements.

This high ripple is supplied by the amplifier and therefore requires the amplifier to experience high repetitive peak currents, resulting in increased amplifier dissipation and / or cost.

Many times it is necessary to connect chokes in each motor lead to lower this ripple current to acceptable values.

3.5. The Digital Amplifier

State of the art servo amplifiers are configured as "digital amplifiers", which means that their various functions are performed by firmware embedded in micro-processors (μP) and/or digital signal processors (DSP).

All signals entering the amplifier, such as analog commands or current feedback signals, are first converted to a digital format (typically 8, 12 or 16 bit) and then processed by the
μP or DSP.

For example, the error in the current loop is created by digitally summing the command with the current feedback signal and then providing loop compensation by using difference equation techniques to create a filter function.

In older analog amplifiers, this operation is accomplished by operational amplifiers and discrete components (resistors and capacitors).

The digital amplifier is programmed (adjusted) via a PC, using software supplied with the amplifier.

This software allows the entry of various motor parameters, loop parameters, speed and torque limits, etc.

It allows the amplifier to be adaptable to a wide range of motor sizes and characteristics without making hardware changes. In this sense it is a more versatile device than analog amplifiers.

In addition, screen displays show various aspects of motor operation (velocity, current, etc.) to aid in optimizing performance.

All final values are stored in non-volatile memory, making them insensitive to temperature and time drift effects as is the case with an analog amplifier.

In addition, multiple amplifiers that will perform the same function will have identical "adjustment" and therefore provide identical performance.

4.0 Controller Operation

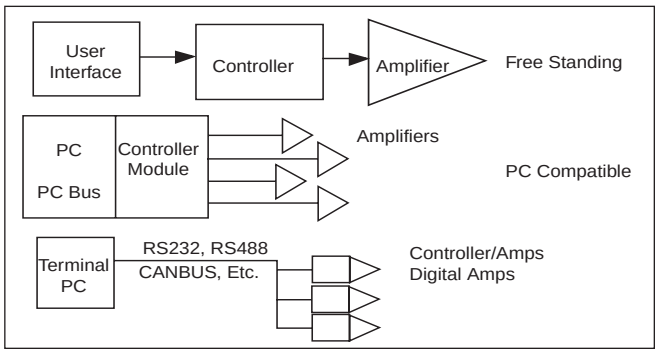

Figure 22

4.1 General

The controller provides four main functions:

1. Accepts Inputs - from a PC, PLC, terminal, etc.
   - from feedback devices; encoders, resolvers

2. Interprets - creates a profile of the required motion

3. Stabilizes - use various techniques to stabilize the system (PID, lead / lag, etc.)

4. Commands - outputs torque or velocity commands to the amplifier.

There are a large variety of controllers available which provide diverse physical and functional arrangements. They typically fall into main groupings as follows:

- Free standing controllers are packaged separately from the rest of the system and can be placed in various locations such as in the host cabinet, adjacent to the amplifiers, in a separate controller cabinet, etc.

- PC compatible controllers are packaged as a printed circuit assembly and mounted within the PC being used for system control.

- The Controller / Amplifier, or the Intelligent Digital Amplifier. The advent of the digital amplifier, containing uP capability and memory has created an amplifier that combines a controller and amplifier in a single package. A series of intelligent amplifiers can be controlled by the host system via various communication buses, with the host controlling high level operation and each amplifier controlling local operation of an individual axis.

These intelligent amplifiers can also operate “stand alone” to provide single or two axis control without the need for a separate host system. If they have “one and a half” axis capacity they can provide stand alone “master/slave” operation including electronic gearing, i.e. the ability of a slave axis to synchronously follow a master axis at a position that is a fraction or multiple of the master axis position.

4.2 Variable Features

In addition to the four main functions, controllers or digital amplifiers have a wide variety of capabilities, among which are:

- Number of axis - can vary from one to 16.
- Output command to amplifier - ± 10 volt analog, 2 sine waves, step + direction (for stepper motor control)
- I / O signals - analog or digital
  - resolution
  - isolated or direct
  - level: TTL, differential, 24 volt
  - function; faults, limits, overload, over temp, etc.
  - rate of data transmission
- Programmability / Display - ease of programming
  - user friendly displays
  - ability to monitor actual operation
  - motor / load data entry
  - motor file size and ease of access
- Interface - RS-232, RS-485, Can Bus, Fire Wire, etc.

4.3 Stabilization Capability

All positional systems employing feedback require some form of stability compensation, since such a system, due to lags in the control loops, is conditionally unstable.

The method typically used is the PID method, in which a filter is implemented in digital form, whose output is then converted to the ±10 volt analog command to the amplifier.

The input to this filter is the error created by comparing the input command to the feedback signal.

4.3.1 Proportional Gain P

The proportional term controls the stiffness of the system. It determines the output power level of the amplifier in response to the loop error.

As the P is increased, a certain error will create higher motor power, attempting to reduce the error.

Unfortunately, as P is increased, the de-stabilizing effect of loop lags becomes greater until at some point the loop becomes unstable and exhibits a limit cycle (oscillates)

4.3.2 Derivative Gain D

This gain controls the amount of compensation proportional to the rate of change of the error. It is analogous to tachometer or rate feedback.

This term is stabilizing and typically adjusted alternately with the P term to produce stable acceptable response/stiffness.

4.3.3 Integral Gain I

This function monitors the loop error and has an output that increases in value as long as the loop error is not zero.
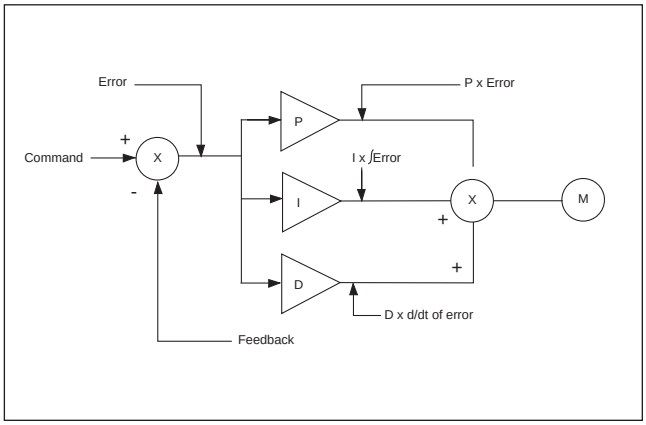
When summed with the P and D terms, it drives the final loop position error to zero, but due to its “lagging” nature trends to de-stabilize the system and its use must be carefully controlled.