M55

Ball Screw Drive, Ball Guide

» Ordering key - see page 196
» Accessories - see page 131
» Additional data - see page 188

General Specifications

Parameter	M55
Profile size (w × h) [mm]	58 × 55
Type of screw	ball screw with single nut
Carriage sealing system	self-adjusting steel cover band
Screw supports	number of screw supports to be specified by customer at order
Lubrication	lubrication of ball screw
Included accessories	none

Performance Specifications

for Units with Single Standard Carriage (A)[1]

Parameter		M55
Stroke length (Smax), maximum	[mm]	2712
Total length (L tot), maximum	[mm]	2975
Linear speed, maximum	[m/s]	1,6
Acceleration, maximum	[m/s²]	8
Repeatability	[± mm]	0,05
Input speed, maximum	[rpm]	3000
Operation temperature limits	[°C]	-20 – 70
Dynamic load (Fx), maximum	[N]	1000
Dynamic load (Fy), maximum	[N]	900
Dynamic load (Fz), maximum	[N]	900
Dynamic load torque (Mx), maximum	[Nm]	9
Dynamic load torque (My), maximum	[Nm]	48
Dynamic load torque (Mz), maximum	[Nm]	48
Drive shaft force (Frd), maximum [2]	[N]	200
Input/drive shaft torque (Mta), maximum	[Nm]	12
Screw diameter (d0)	[mm]	16
Screw lead (p)	[mm]	5, 10, 20
Weight	[kg]	
of unit with zero stroke		3,90
of every 100 mm of stroke		0,56
of carriage		1,20
of option single screw support		0,83
of option double screw supports		1,88

[1] See next page for deviating values of units with other carriage types.
[2] Only relevant for units without RediMount flange.

Carriage Idle Torque (M idle) [Nm]

Input speed [rpm]	Screw lead [mm]		
	p = 5	p = 10	p = 20
500 - no screw supports	0,02	0,03	0,04
500 - with screw supports	0,03	0,05	0,07

M idle = the input torque needed to move the carriage with no load on it.

Deflection of the Profile

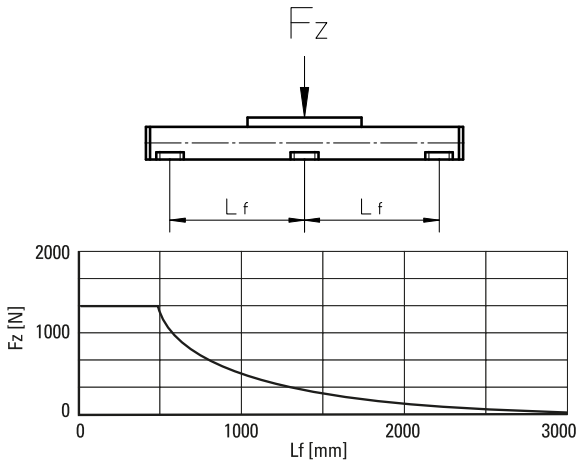

Critical Speed

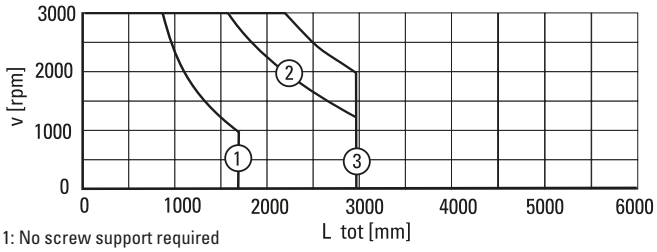

1: No screw support required
2: Single screw support required
3: Double screw supports required

Definition of Forces

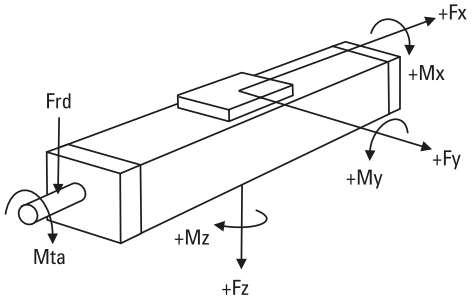

Dimensions	Projection	Online Sizing & Selection!
METRIC		www.LinearMotioneering.com

M55

Ball Screw Drive, Ball Guide

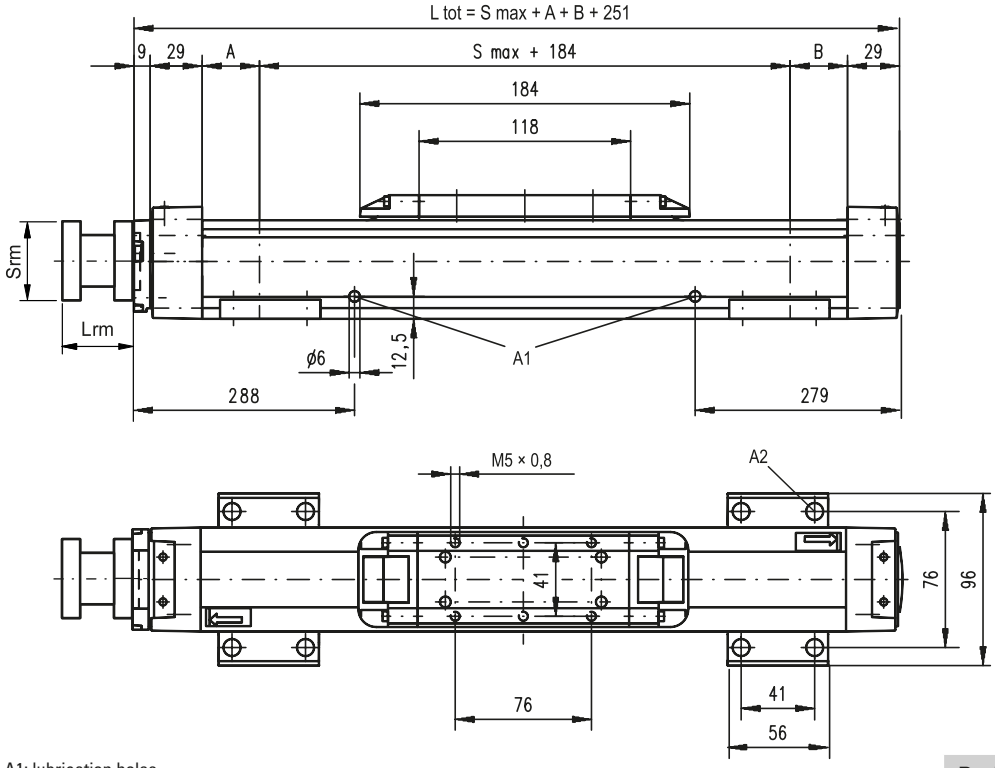

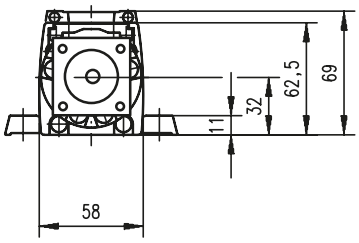

A1: lubrication holes
A2: ø9,5/ø5,5 for socket head cap screw M5

Screw support configuration	A [mm]	B [mm]	Total length (L tot) [mm]
No screw support	6	6	L tot = Smax + A + B + 251
Single screw support	40	40	L tot = Smax + A + B + 251
Double screw supports	92	92	L tot = Smax + A + B + 251

RediMount Flange Specifications

Parameter		Min	Max
Flange length (Lrm)	[mm]	57	92
Flange square (Srm)	[mm]	60	139
Flange weight *	[kg]	1,84	

* Max. weight including coupling and fastening screws

Performance Specifications

for Units with Double Standard Carriage (C)

Parameter		M55
Stroke length (Smax), maximum	[mm]	2512
Total length (L tot), maximum	[mm]	2975
Minimum distance between carriages (Lc)	[mm]	200
Dynamic load (Fy), maximum	[N]	1350
Dynamic load (Fz), maximum	[N]	1350
Dynamic load torque (My), maximum	[Nm]	Lc[1] × 0,675
Dynamic load torque (Mz), maximum	[Nm]	Lc[1] × 0,675
Force required to move second carriage	[N]	2
Weight of unit with zero stroke of carriages	[kg]	 6,5 2,4

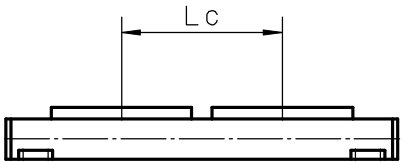

Screw support configuration	A [mm]	B [mm]	Total length (L tot) [mm]
No screw support	6	6	L tot = Smax + A + B + Lc + 251
Single screw support	40	40	L tot = Smax + A + B + Lc + 251
Double screw supports	92	92	L tot = Smax + A + B + Lc + 251

M75

Ball Screw Drive, Ball Guide

» Ordering key - see page 196
» Accessories - see page 131
» Additional data - see page 188

General Specifications

Parameter	M75
Profile size (w × h) [mm]	86 × 75
Type of screw	ball screw with single nut
Carriage sealing system	self-adjusting steel cover band
Screw supports	number of screw supports to be specified by customer at order
Lubrication	lubrication of ball screw
Included accessories	none

Performance Specifications

for Units with Single Standard Carriage (A)[1]

Parameter		M75
Stroke length (Smax), maximum	[mm]	
screw lead 5, 20 mm		3772
screw lead 12,7 mm		2665
Total length (L tot), maximum	[mm]	
screw lead 5, 20 mm		4075
screw lead 12,7 mm		2968
Linear speed, maximum	[m/s]	1,0
Acceleration, maximum	[m/s²]	8
Repeatability	[± mm]	0,05
Input speed, maximum	[rpm]	3000
Operation temperature limits	[°C]	-20 – 70
Dynamic load (Fx), maximum	[N]	2500
Dynamic load (Fy), maximum	[N]	2000
Dynamic load (Fz), maximum	[N]	2000
Dynamic load torque (Mx), maximum	[Nm]	18
Dynamic load torque (My), maximum	[Nm]	130
Dynamic load torque (Mz), maximum	[Nm]	130
Drive shaft force (Frd), maximum [2]	[N]	600
Input/drive shaft torque (Mta), maximum	[Nm]	30
Screw diameter (d0)	[mm]	20
Screw lead (p)	[mm]	5, 12,7, 20
Weight	[kg]	
of unit with zero stroke		6,90
of every 100 mm of stroke		1,05
of carriage		2,50
of option single screw support		1,70
of option double screw supports		3,58

[1] See next page for deviating values of units with other carriage types.
[2] Only relevant for units without RediMount flange.

Carriage Idle Torque (M idle) [Nm]

Input speed [rpm]	Screw lead [mm]		
	p = 5	p = 12,7	p = 20
500 - no screw supports	0,04	0,1	0,16
500 - with screw supports	0,06	0,12	0,2

M idle = the input torque needed to move the carriage with no load on it.

Deflection of the Profile

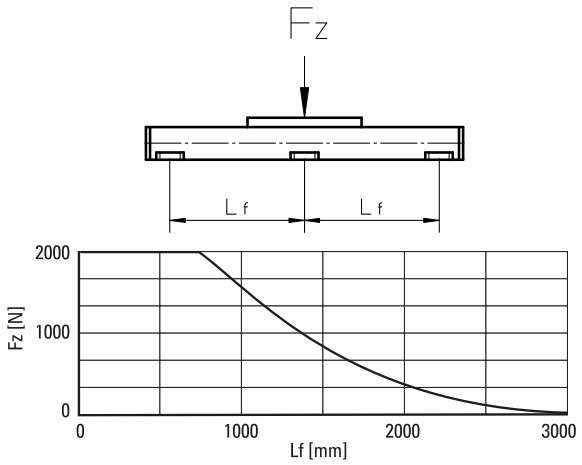

Critical Speed

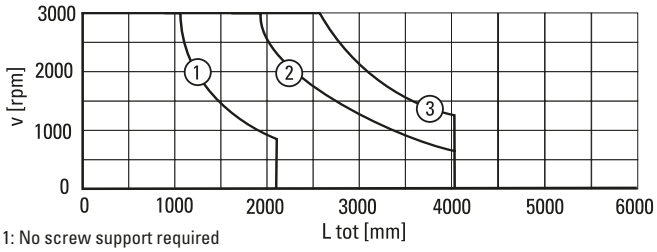

1: No screw support required
2: Single screw support required
3: Double screw supports required

Definition of Forces

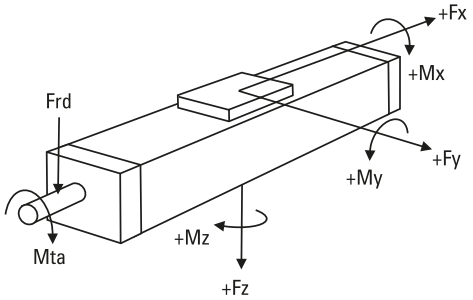

Dimensions	Projection	Online Sizing & Selection!
METRIC		www.LinearMotioneering.com

M75

Ball Screw Drive, Ball Guide

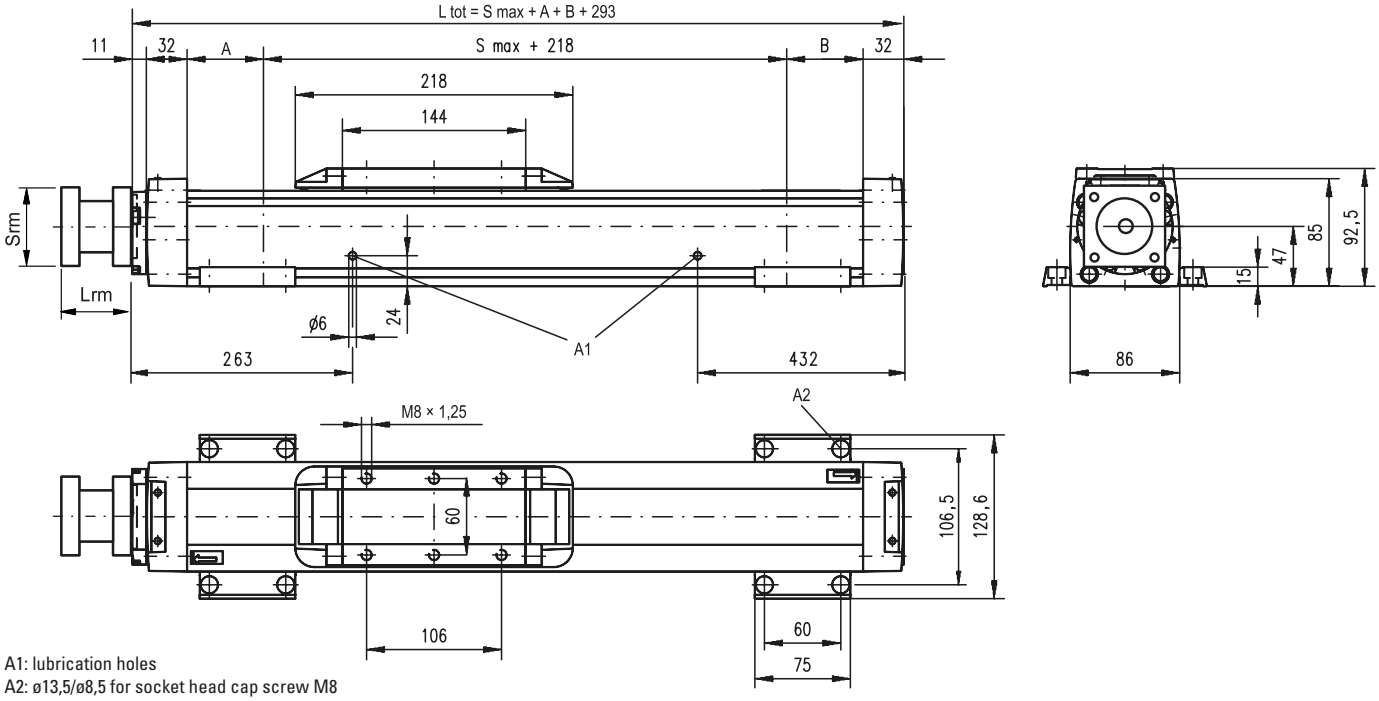

A1: lubrication holes
A2: ø13,5/ø8,5 for socket head cap screw M8

Screw support configuration	A [mm]	B [mm]	Total length (L tot) [mm]
No screw support	5	5	L tot = Smax + A + B + 293
Single screw support	60	60	L tot = Smax + A + B + 293
Double screw supports	126	126	L tot = Smax + A + B + 293

RediMount Flange Specifications

Parameter		Min	Max
Flange length (Lrm)	[mm]	81	143
Flange square (Srm)	[mm]	90	200
Flange weight *	[kg]	5,60	

* Max. weight including coupling and fastening screws

Performance Specifications

for Units with Double Standard Carriage (C)

Parameter		M75
Stroke length (Smax), maximum	[mm]	
screw lead 5, 20 mm		3522
screw lead 12,7 mm		2415
Total length (L tot), maximum	[mm]	
screw lead 5, 20 mm		4075
screw lead 12,7 mm		2968
Minimum distance between carriages (Lc)	[mm]	250
Dynamic load (Fy), maximum	[N]	3000
Dynamic load (Fz), maximum	[N]	3000
Dynamic load torque (My), maximum	[Nm]	Lc[1] × 1,5
Dynamic load torque (Mz), maximum	[Nm]	Lc[1] × 1,5
Force required to move second carriage	[N]	2
Weight	[kg]	
of unit with zero stroke		12,2
of carriages		5,0

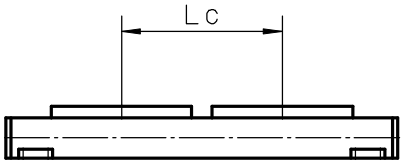

Screw support configuration	A [mm]	B [mm]	Total length (L tot) [mm]
No screw support	5	5	L tot = Smax + A + B + Lc + 293
Single screw support	60	60	L tot = Smax + A + B + Lc + 293
Double screw supports	126	126	L tot = Smax + A + B + Lc + 293

[1] Value in mm

Accessories

Accessory Index

Mounting Kits.....page 132

- Mounting clamps 132
- Mounting clamps for multi axis systems 134
- Mounting plates for multi axis systems 135
- Adapter plates 135
- T-slot bolts and nuts..... 136

Cover and Protection Kits.....page 137

- Felt pad wipers type FA 137
- Shaft protection cover.....137
- Protective bellows 138
- Protective shrouds..... 139
- Environment protection type S1 and S2..... 140

Motors, Gears and Transmission Kits.....page 142

- Worm gears type BS40 and TBS40.....142
- Belt gears type RT and BGM 146
- Planetary gears type Micron DT and DTR.....152
- Intermediate shafts type VWZ and DSP 154
- Brakes.....158

Electrical Feedback Devices.....page 159

- Limit switch brackets and limit switches.....159
- Inductive and magnetic sensors and sensor brackets.....160
- Encoders 163
- Limit switch kits type ES.....164
- Sensor rails and kits type ENT, ENF and ENK.....166
- Encoder kits type ADG.....168

Non-driven Linear Motion Systems.....page 170

- WHxx non-driven units..... 170
- WMxx non-driven units..... 172
- Mxx non-driven units..... 175

Non-RediMount Linear Motion Systems.....page 176

- WMxx and WVxx non-RediMount units.....176
- MLSMxx non-RediMount units.....178
- Mxx ball screw driven non-RediMount units 179
- WH40 non-RediMount units.....180
- WMxxZ non-RediMount units 181
- Mxx belt driven non-RediMount units.....182
- MLSM80Z non-RediMount units 183
- M50 belt driven non-RediMount units.....184
- WHxx non-RediMount units.....184
- MLSH60Z non-RediMount units 186
- WHZxx non-RediMount units 186

Accessories

Mounting Kits

Mounting Clamps Type N1 and N2 (single clamp)[1]

Unit type	N1	N2	A	B	C	D	øE	F	øG	H	Screws	Ms [Nm]
WH40	890 885 0001	–	54	16	9,5	40	10	5,7	5,5	7	ISO4762-8.8	5,4
WH50	890 885 0001	–	54	16	9,5	40	10	5,7	5,5	7	ISO4762-8.8	5,4
WH80 / WB60	890 190 02	–	68	17,5	17	50	11	6,5	6,6	7	ISO4762-8.8	9
WH120	890 192 13	–	80	25	18	50	15	8,5	9	10	ISO4762-8.8	20
WM40 / WB40	890 885 001	–	54	16	9,5	40	10	5,7	5,5	7	ISO4762-8.8	5,4
WM60 / WV60 / WZ60	890 190 02	–	68	17,5	17	50	11	6,5	6,6	7	ISO4762-8.8	9
WM80 / WV80 / WZ80	890 190 02	–	68	17,5	17	50	11	6,5	6,6	7	ISO4762-8.8	9
WM60Z / WM80Z	890 190 02	–	68	17,5	17	50	11	6,5	6,6	7	ISO4762-8.8	9
WM120 / WV120	890 192 13	–	80	25	18	50	15	8,5	9	10	ISO4762-8.8	20
MLS60	890 190 02	890 192 26	68/120	17,5	17	50	11	6,5	6,6	7	ISO4762-8.8	9
MLS80	890 192 13	890 192 31	80/200	25	18	50	15	8,5	9	10	ISO4762-8.8	20

[1] Screws included in the shipment of above clamps

Ms = tightening torque of screws

N1

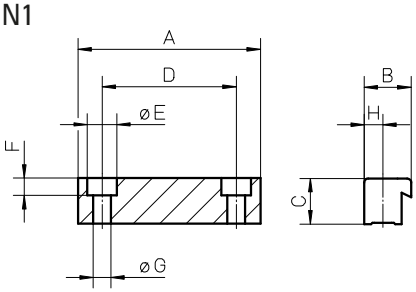

N2

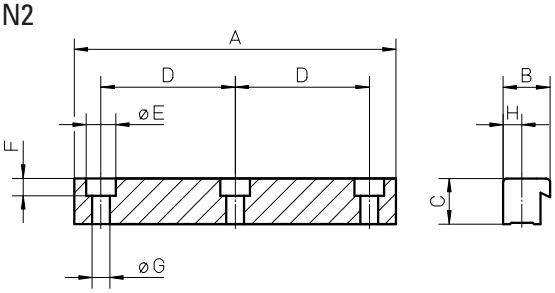

Mounting Clamps Type M1 and M2 (single clamp)[1]

Unit type	M1	M2	A	B	C	D	øE	F	øG	H	Screws	Ms [Nm]
M50 [1]	D312 248	–	25	30	20	–	–	–	6,5	14	ISO4762-8.8	9,4
M55 [1]	D313 403	D313 402	25/56	25,5	10,7	41	9,5	5,3	5,5	10,2	ISO4762-8.8	5,5
M75 [1]	D312 747	D312 748	30/75	28,5	15	60	14	8,5	8,5	11	ISO4762-8.8	23
M100 [1]	D312 339	D312 334	45/92	46,5	22	60	17	10,5	10,5	20	ISO4762-8.8	45

[1] No screws included in the shipment of above clamps

Ms = tightening torque of screws

M1

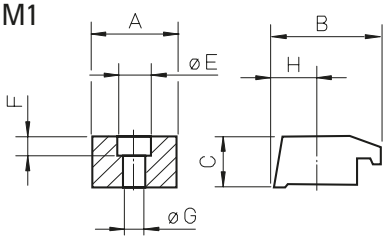

M2

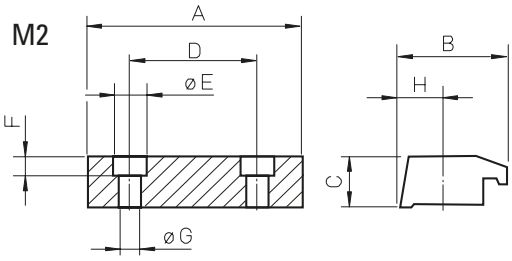

Accessories

Mounting Kits

Mounting Clamps Type M2 with Plate[1]

Unit type	p/n	A	B	C	D	E	øF	øG	H
M50	D312 117	7	20	105	35	30	6,5	11	–
M55	D313 474	8,5	15	100	44	70	8,5	14	44
M75	D312 718	8,5	15	134	44	80	8,5	14	44
M100	D312 317	8,5	20	190	44	100	8,5	14	44

[1] two mounting clamps of version M2 (see page 132) and screws to connect these to the plate are included in shipment

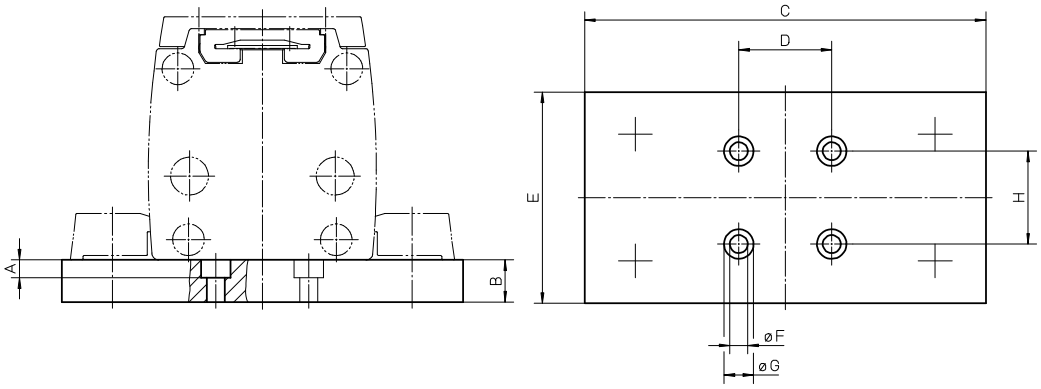

Accessories

Mounting Kits

Mounting Clamps Type N1 for Multi Axis Systems[1]

Unit type X-axis	Unit type Y-axis	Clamps	A	B	C	D	øE	F	øG	H
WM40 / WH40	WM40 / WH40	on request	–	–	–	–	–	–	–	–
WM60	WM60	890 191 94	58	17,5	17	40	11	6,5	6,6	7

[1] all necessary screws are included in the shipment

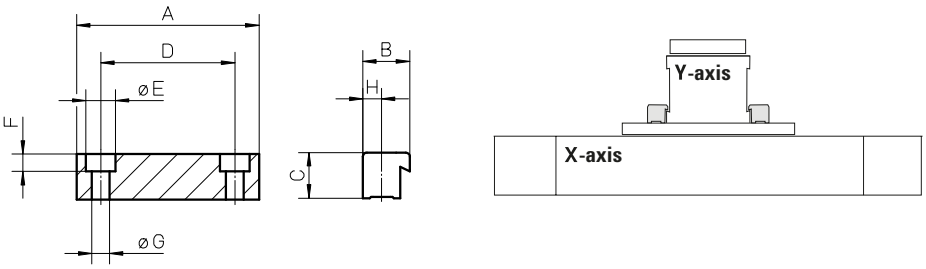

Mounting Clamps Type M2 for Multi Axis Systems[1]

Unit type X-axis	Unit type Y-axis	p/n	A	B	C	D	øE	F	øG	H
M55	M55	D313 424	56	25,5	10,7	41	9,5	5,3	5,5	10,2
M75	M75	D312 719	75	28,5	15	60	14	8,5	8,5	11
M100	M100	D312 304	92	46,5	22	60	17	10,5	10,5	20

Mounting Clamps Type M2 with Plate for Multi Axis Systems[1]

Unit type X-axis	Unit type Y-axis	p/n	A	B	C	D	E	øF	øG	H
M55	M75	D313 470	5,5	15	134	76	80	5,5	9,5	41
M75	M55	D313 060	8,5	15	134	106	80	8,5	14	60
M75	M100	D313 062	8,5	20	190	106	100	8,5	14	60
M100	M75	D313 292	10,5	20	190	142	100	10,5	17	60

[1] all necessary screws are included in the shipment

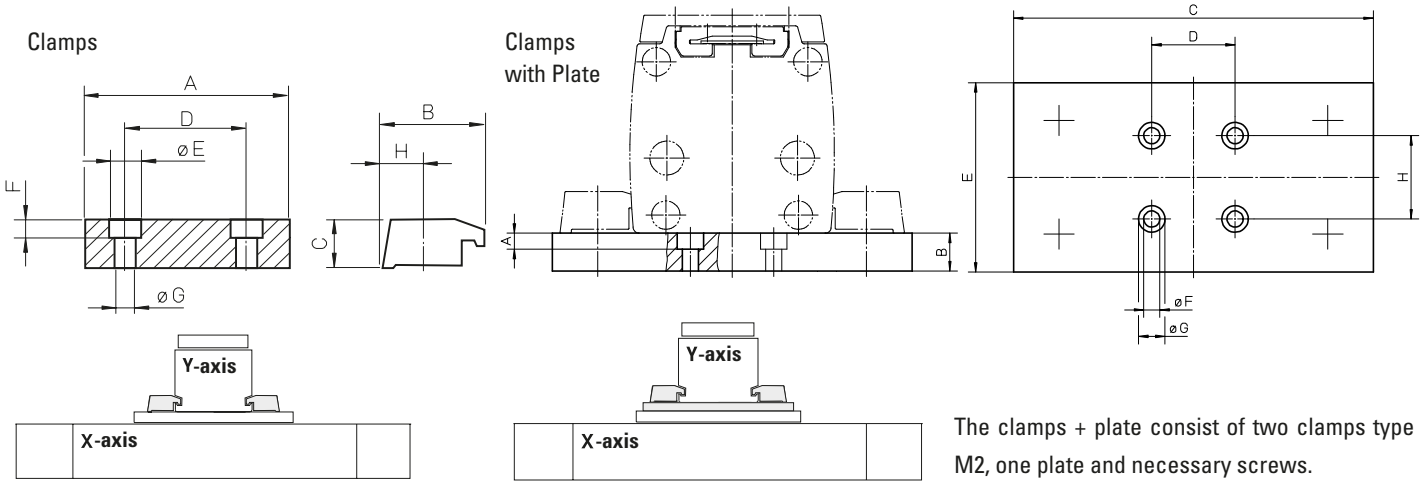

The clamps + plate consist of two clamps type M2, one plate and necessary screws.

Accessories

Mounting Kits

Mounting Plates for Multi Axis Systems

Unit type X-axis	Unit type Y-axis	p/n	A	B	C	D	E	F	G	H	J	K	L
MS33	MS33	MSXYP33-33	30	30	6	9	6	60	120	30	100	M5 x 0,8 - 6H	12,7
MS33	MS25	MSXYP33-25	30	30	5,5	9	6	60	60	42	42	M3 x 0,5 - 6H	12,7
2HB10	MS25	2HXYP10-MS25	70	70	5,5	9	6	100	100	42	42	M3 x 0,5 - 6H	12,7
2HB10	MS33	2HXYP10-MS33	70	70	6	9	6	100	120	30	100	M5 x 0,8 - 6H	12,7
2HB10	2HB10	2HXYP10-10	70	70	5,5	9	6	100	100	35	75	M5 x 0,8 - 6H	12,7
2HB20	2HB10	2HXYP20-10	145	145	10,5	16,5	11	200	200	35	75	M5 x 0,8 - 6H	22
2HB20	2HB20	2HXYP20-10	145	145	10,5	16,5	11	200	200	85	120	M8 x 1,25 - 6H	22

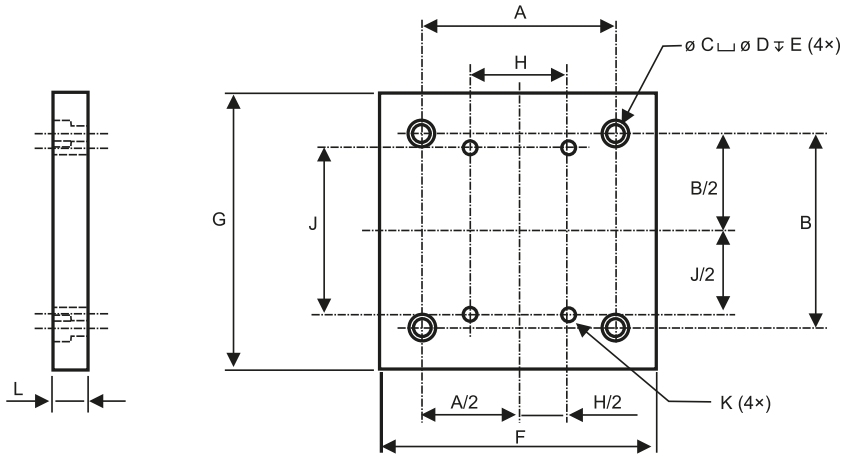

Combinations for other units are available. Plates to connect X and Z axes are also available for the Microstage units size MS25 and MS33. Contact customer support for details.

Adapter Plates

Unit type	I	I I	A	B	C	D	E	øF	G
M55	D313 422	D313 423	40	60	20	38	25,5	6,5	37
M75	D312 746	–	40	–	26	-	45	6,5	51
M75	–	D312 745	–	60	-	39	45	7,5	51
M100	D312 338	–	40	–	26	-	69	6,5	62
M100	–	D312 337	–	60	-	39	69	7,5	62

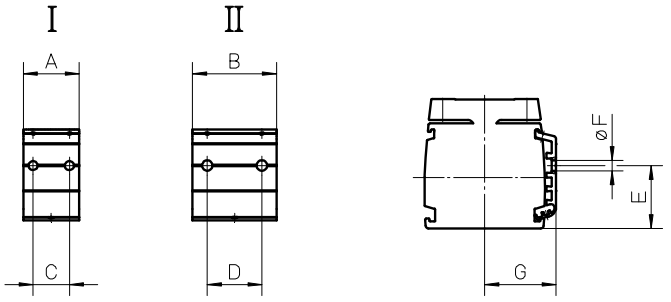

Adapter plates are fitted in the grooves along the profile and can be used to attach sensors, switches, cable ducts etc. to the unit.

Accessories

Mounting Kits

T-slot Bolts

Unit type	p/n	øD	H
M50	D312 221	M5	14
Z2	D800 089	M10	28
Z3	D800 089	M10	28

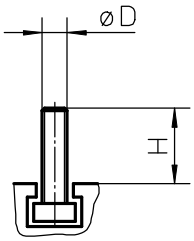

T-slot Nuts

Unit type	p/n	A	B	C	D	øE	F
ZB	D900 151	18	11	1,5	6,3	M6	25
ZB	D900 150	18	11	1,5	6,3	M8	25
MLS60	920 303 0037	16	8	4	6	M6	16
MLS80	920 303 0039	19,5	10	5,5	10,5	M8	20
WH120	911 044 19	15	10	6	12	M8	15
WM120	911 044 19	15	10	6	12	M8	15
2RB12, 2HB10, 2HB20	TNUT-01-M3	7	4	1,75	3	M3	9
2RB16, 2HB10	TNUT-02-M4	9,5	5,5	2,25	4	M4	12
2RB12	TNUT-03-M4	12	7	2,5	5	M4	15
2RB16, 2HB20	TNUT-04-M4	16,5	7,9	4,8	6	M4	16
2RB16, 2HB20	TNUT-04-M5	16,5	7,9	4,8	6	M5	16
2RB16, 2HB20	TNUT-04-M6	16,5	7,9	4,8	6	M6	16

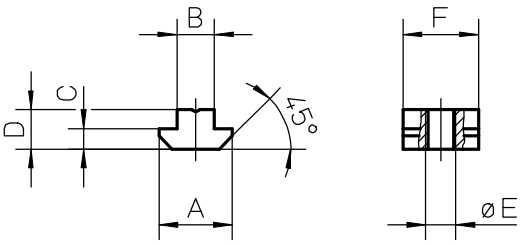

Accessories

Cover and Protection Kits

FA Felt Pad Wiper

Unit type	Number of carriages on the unit	p/n	X
WH50	1	890 885 0064	6
WH50	2	2 × 890 885 0064	6
WH80	1	890 890 0069	7
WH80	2	2 × 890 890 0069	7
WH120	1	890 895 0058	8
WH120	2	2 × 890 895 0058	8
WHZ50	1	890 885 0064	6
WHZ50	2	2 × 890 885 0064	6
WHZ80	1	890 890 0069	7
WHZ80	2	2 × 890 890 0069	7

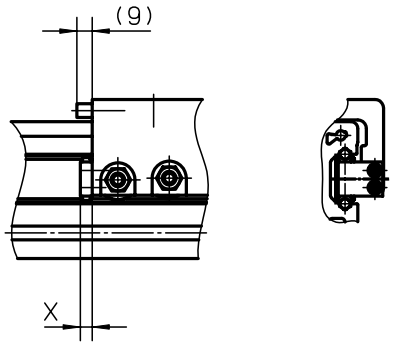

The felt pad wipers remove dust and dirt from the guides and are located on the carriage(s). They may increase the driving torque slightly but do not reduce the stroke of the unit. The felt pad wipers comes mounted from factory as standard on all WH and WHZ units but can also be ordered here as a spare part.

Shaft Protection Cover

Unit type	p/n	A	B
M50	D312 201	126	35
M55	D312 201	151	35
M75	D700 178	198	45
M100	D700 178	202	45

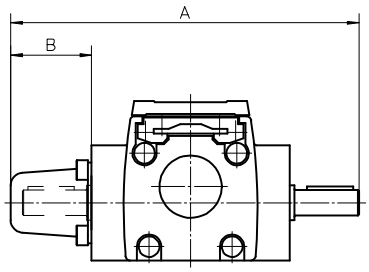

The shaft protection cover is used to cover shafts which are not being used. The covers are fitted by the customer.

Accessories

Cover and Protection Kits

Protective Bellows type 2D

Unit type	p/n	H	H1	B
2DB08	BEL-2DB-08	48	34	130
2DB12	BEL-2D-12	61	36,5	152,5
2DB12	BEL-2D-16	73	43	190,5

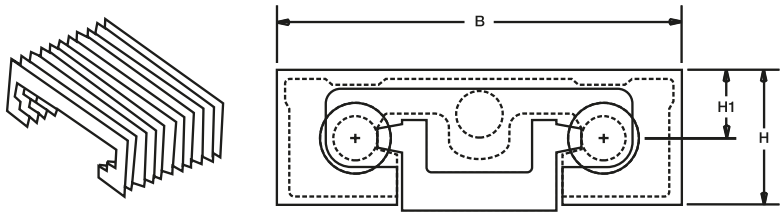

Bellows protect the unit from dirt and dust. Note that the bellows option reduces the available stroke of the unit by 28%. Bellows can be ordered and mounted at the factory - see ordering key. Bellows can also be ordered separately and fitted by the customer. In that case, order two pieces of bellows where the length of each bellows piece = stroke length of the unit × 0.86.

Protective Bellows type 2H

Unit type	p/n	B	B2	H	H1	H2	H4
2HB10	BEL-2H-10	103	81	26	11	10	0
2HB20	BEL-2H-20	199	167	48	30	15	5

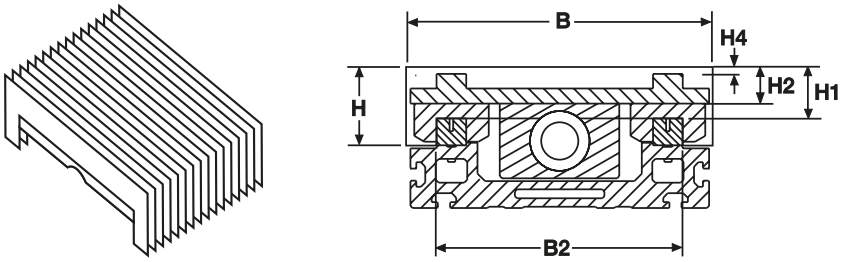

Bellows protect the unit from dirt and dust. Note that the bellows option reduces the available stroke of the unit by 28%. Bellows can be ordered and mounted at the factory - see ordering key. Bellows can also be ordered separately and fitted by the customer. In that case, order two pieces of bellows where the length of each bellows piece = stroke length of the unit × 0.86.

Protective Bellows type 2R

Unit type	p/n	B	B2	H	H1	H2	H3	H4
2RB12	BEL-2R-12	128	75	48	37	29	15	12
2RB16	BEL-2R-16	158	95	52	43	30	15	10

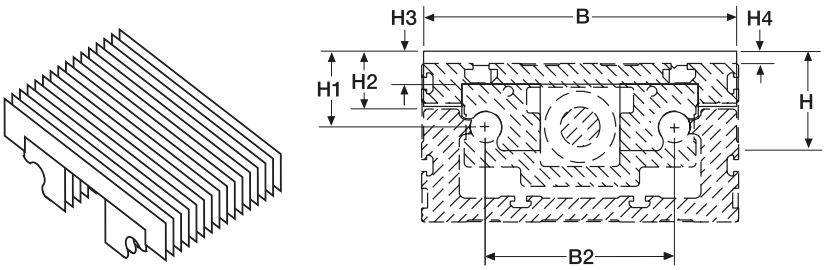

Bellows protect the unit from dirt and dust. Note that the bellows option reduces the available stroke of the unit by 28%. Bellows can be ordered and mounted at the factory - see ordering key. Bellows can also be ordered separately and fitted by the customer. In that case, order two pieces of bellows where the length of each bellows piece = stroke length of the unit × 0.86.

Accessories

Cover and Protection Kits

Protective Shrouds

Unit type	
2HB10	see ordering key of the unit for order or www.LinearMotioneering.com
2HB20	see ordering key of the unit for order or www.LinearMotioneering.com

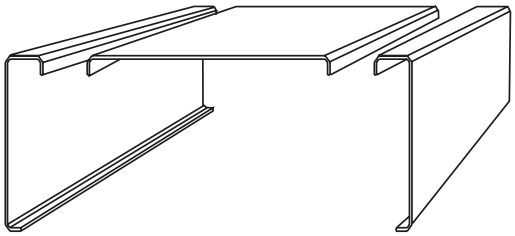

The protective shrouds are made of metal and protect the drive mechanism of the unit from dust and dirt but leave the guides unprotected. Shrouds do not reduce the stroke of the unit but they will add 4 mm to the width of the unit. Shrouds are ordered mounted from factory and are stated in the ordering key of the unit.

Accessories

Cover and Protection Kits

Environment Protection Option Type S1 and S2, compatibility table

Unit type	Drive type	Guide type	S1	S2	Ordering
M55	ball screw	slide	•		see ordering key of the unit for order
M55	belt drive	slide	•	•	see ordering key of the unit for order
		ball	•		see ordering key of the unit for order
M75	ball screw	slide	•		see ordering key of the unit for order
M75	belt drive	slide	•	•	see ordering key of the unit for order
		ball	•		see ordering key of the unit for order
M100	ball screw	slide	•		see ordering key of the unit for order
M100	belt drive	slide	•	•	see ordering key of the unit for order
		ball	•		see ordering key of the unit for order
WM60 / WM80 / WM120	ball screw	ball	•		see ordering key of the unit for order
WV60 / WV80 / WV120	ball screw	no guide	•		see ordering key of the unit for order
WH50 / WH80 / WH120	belt drive	wheel	•	•	see ordering key of the unit for order
WHZ50 / WHZ80	belt drive	wheel	•		see ordering key of the unit for order

The S1 and S2 environment protection options are available for some of the units as per table above. All performance data and the life expectancy are the same as for standard units except for WH and WHZ units (contact customer service for more information). S1 can be ordered for both ball screw and belt driven units with ball, slide or wheel guides while S2 only is possible for belt driven units with slide or wheel guides. Never use chemical agents and/or cleaning detergents before contacting your local Thomson customer service for advice.

S1 - Wash down protection
Typical places where S1 is used are in slaughter houses, dairy plants, food plants or in any other light wash down application.

S2 - Enhanced wash down protection
Typical places where S2 is used are in moderately wet areas such as in paper mills, galvanizing equipment, food industries or in any other harsh environment application where enhanced wash down capabilities are required.

Accessories

Cover and Protection Kits

Environment Protection Options Type S1 and S2, technical specification

Item	S1	S2
External screws, bolts and nuts	stainless material class A2 or better	stainless material class A4 or better
Internal screws, bolts and nuts	standard material	stainless material class A2 or better
Drive shaft, ball screw driven units	standard material	-
Drive shaft, belt driven units	stainless material SS2333 or better	stainless material SS2343 or better
Tension wheel shaft	standard material	stainless material SS2333 or better
Bearings type	standard bearings	2RS
Bearing sealings, belt driven units	radial sealings	radial sealings
Surface treatment of machined extruded aluminum parts	none	anodizing
Surface treatment of machined casted aluminum parts	none	anodizing
Cam rollers and idler shafting (WH and WHZ units)	standard material	stainless material
Belt retainer (WH units)	none	stainless material

Accessories

Gears and Transmission Kits

BS40 Worm Gears, dimensions

Gear	A	B	C	D	E	F
BS40	54	40	46	10	100	92

The worm gear includes the gear, the bell house and a matching coupling.

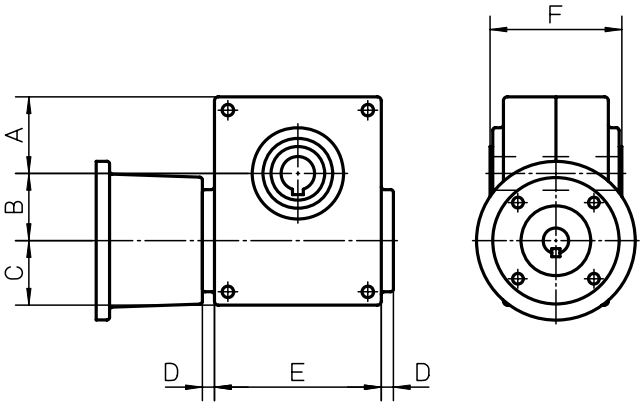

BS40 Worm Gears, compatibility table

Unit	BS40	IEC71B14	IEC80B14	IEC90B14	A	L
Z2 (MGZ2K32)	•	•			17	58
Z2 (MGZ2K32)	•		•		17	68

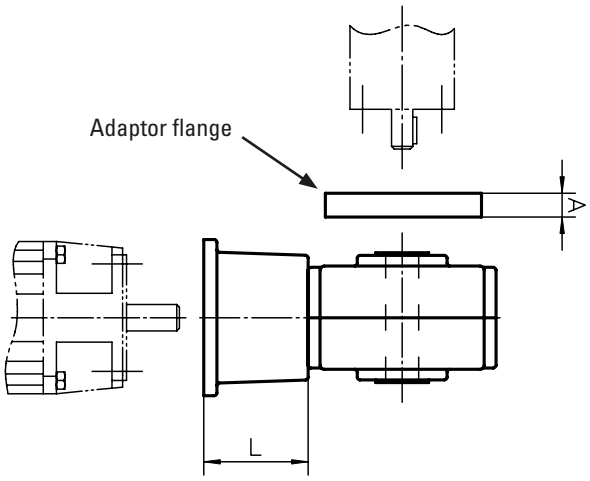

To be able to install the gear to the unit an adaptor flange must be used between the gear and the unit. In addition, the adaptor flange must be ordered separately.

Accessories

Gears and Transmission Kits

BS40 Worm Gears, ordering key

	1	2	3
Example	BS40	-10	-71

1. Type and size of worm gear
BS40 = BS40 worm gear

2. Gear ratio
-3 = 3:1
-5,5 = 5,5:1
-7,5 = 7,5:1
-10 = 10:1
-15 = 15:1
-20 = 20:1
-24 = 24:1
-30 = 30:1
-40 = 40:1
-48 = 48:1
-60 = 60:1

6. Motor size
no code = without bell house and coupling
-71 = IEC71B14
-80 = IEC80B14

Adaptor flanges for BS40 Worm Gears, part numbers

Unit	p/n
Z2 (MGZ2K32)	D606 250

Accessories

Gears and Transmission Kits

TBS40 Worm Gears, dimensions

Gear	A	B	C	D	E	F	øG	H	øI	J	K
TBS40	54	40	46	10	100	125	14j6	45	65	M8 (4×)	25

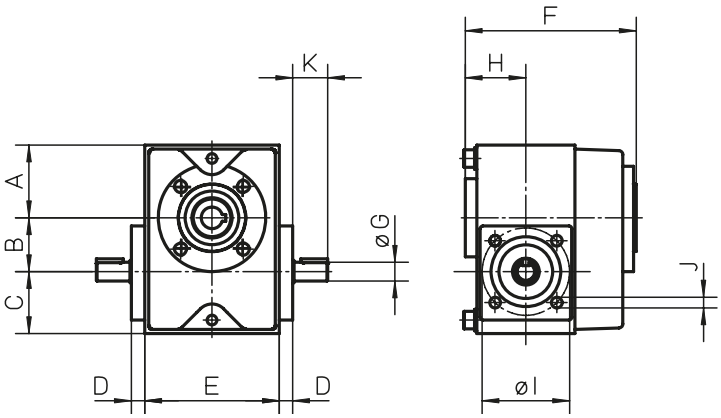

The worm gear is installed directly to the unit and requires no intermediate coupling between the two.

TBS40 Worm Gears, compatibility table

Unit	TBS40	IEC71B14	IEC80B14	A	L
Z2 (MGZ2K25)	•	•		32	58
Z2 (MGZ2K25)	•		•	32	68
Z3 (MGZ3K25)	•	•		32	58
Z3 (MGZ3K25)	•		•	32	68
M75	•	•		32	58
M75	•		•	32	68
M100	•	•		32	58
M100	•		•	32	68

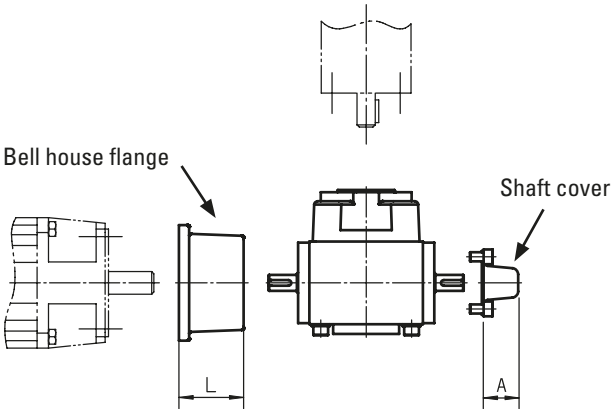

To be able to install the gear to the motor a bell house flange must be used between the gear and the motor. The bell house flange, which includes a matching coupling, is ordered separately. A shaft cover can be ordered to cover the second primary shaft on the gear in case it is not being used.

Accessories

Gears and Transmission Kits

TBS40 Worm Gears, ordering key

	1	2	3
Example	TBS40	-3	-216

1. Type and size of worm gear	2. Gear ratio	3. Fixed code
TBS40 = TBS40 worm gear	-3 = 3:1 -5,5 = 5,5:1 -7,5 = 7,5:1 -10 = 10:1 -15 = 15:1 -20 = 20:1 -24 = 24:1 -30 = 30:1 -40 = 40:1 -48 = 48:1 -60 = 60:1	-216

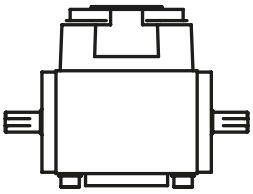

Bell house flanges for TBS40 Worm Gears, part numbers

Motor size	p/n
IEC71B14	D701 011
IEC80B14	D701 015

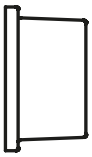

Shaft Cover for TBS40 Worm Gears, part numbers

Gear type	p/n
TBS40	D701 020

Accessories

Gears and Transmission Kits

RT Belt Gears, dimensions

Gear	A	B	C	D
RT40	110	30	176	68
RT60	175	74	345	170
RT80	175	74	345	170

RT40

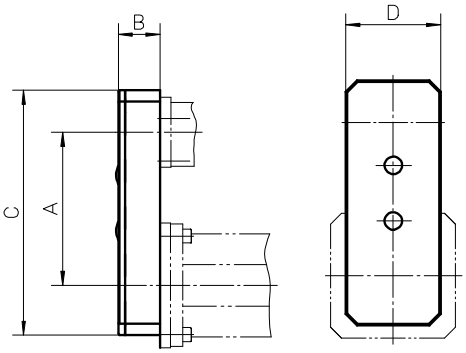

RT60/80

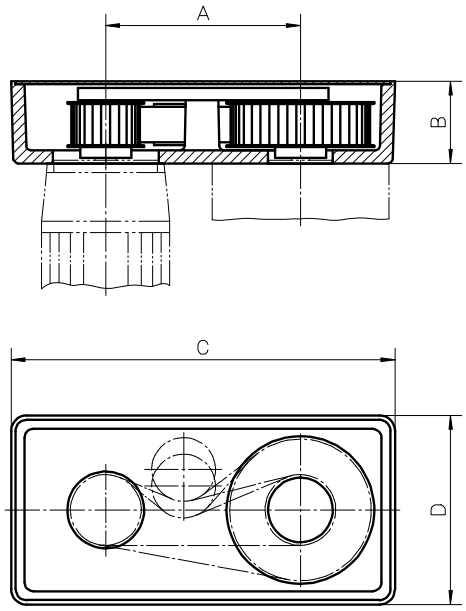

RT Belt Gears, data

Gear	i	nmax [rpm]	Mmax [Nm]	M idle [Nm]	η	J [kgm²]	Weight [kg}
RT40	1:1	3000	1,75	0,3	0,80	0,000025	0,62
RT60	1:1	3000	15	0,7	0,85	0,000438	5,6
RT60	2:1	3000	15	0,7	0,85	0,001011	7,1
RT80	1:1	3000	30	0,7	0,85	0,000465	5,5
RT80	2:1	3000	30	0,7	0,85	0,001038	7

i = gear ratio
nmax = max. input speed
Mmax = max. input torque
M idle = idle torque
η = efficiency factor
J = inertia

Accessories

Gears and Transmission Kits

RT Belt Gears, compatibility table

Gear	WH40 / WM40	WM60 / WV60 / WZ60 / MLSM60D	WH80 / WM80 / WV80 / WM120 / WV120 / MLSM60D / MLSM80D
RT40	•		
RT60		•	
RT80			•

RT Belt Gears, ordering key

	1	2	3	4	5
Example	RT80	-2	-• • •	-P-N	-05

1. Type and size of belt gear
RT40 = RT belt gear size 40
RT60 = RT belt gear size 60
RT80 = RT belt gear size 80

2. Gear ratio
-1 = 1:1
-2 = 2:1

3. Motor code
- xxy = alphanumeric motor code (e.g. -AK5). There are several motors that fit each gear and the list of suitable motors is continuously being updated. Please contact customer support for help to see which motors are currently are on the list or if your preferred motor can be added to the list.

4. Type of mounting
-P-M = gear supplied mounted to the unit
-P-N = gear supplied unmounted

5. Compatible unit type
-01 = WH40
-02 = WH50
-03 = WH80
-04 = WH120
-05 = WM40
-06 = WM60
-07 = WM80
-08 = WM120
-09 = WV60
-10 = WV80
-11 = WV120
-12 = WHZ50
-13 = WHZ80
-14 = WZ60
-15 = WZ80
-16 = MLSH60Z
-18 = MLSM80Z
-19 = MLSM60D
-20 = MLSM80D

RT belt gears can only be used on units without a RediMount flange.

Accessories

Gears and Transmission Kits

BGM Belt Gears, dimensions

Gear	A	B	C	D	øE	F	G	H	I	J
BGM09	118,7	52	255	140	20 H9	95	115	60	–	–
BGM41	155,2	70	305	165	25 H9	122	147	70	–	–
BGM81	200	73	399	224	30 H9	134	159	90	90H14	170

BGM09/41/81 - WITHOUT CLEVIS OPTION

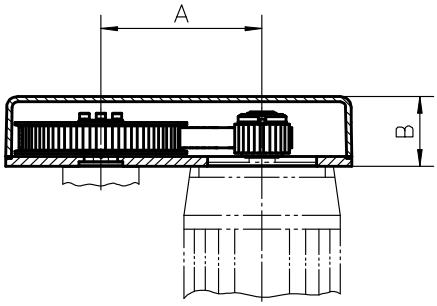

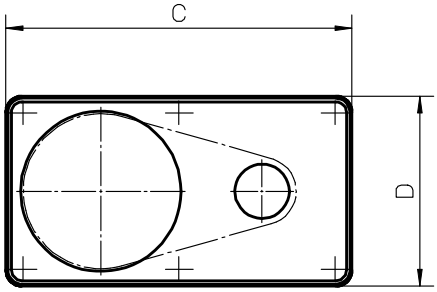

BGM belt gears can only be used on units without a RediMount flange. The belt gear comes in parts and is assembled to the unit and motor by the customer.

BGM09/41/81 - WITH CLEVIS OPTION TYPE S

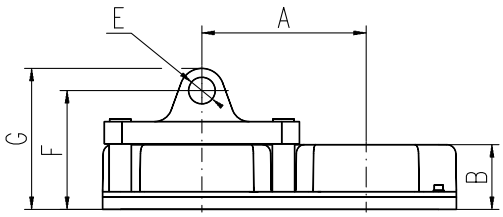

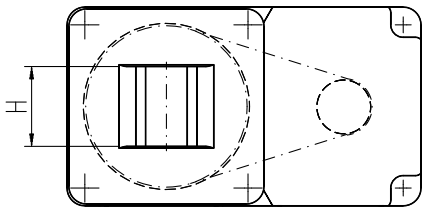

BGM81 - WITH CLEVIS OPTION TYPE R

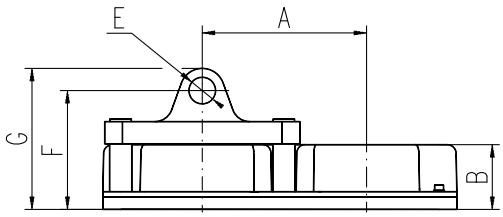

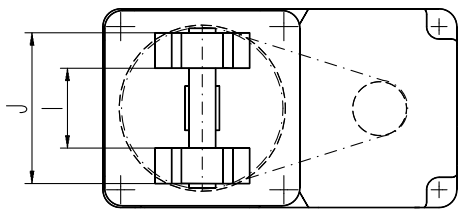

Accessories

Gears and Transmission Kits

BGM Belt Gears, data

Gear	i	nmax [rpm]	Mmax [Nm]	η	J [kgm²]	Weight [kg}
BGM09	1,04:1	4000	4,1	0,85	0,000102	2
BGM09	1,85:1	4000	4,1	0,85	0,000112	2,1
BGM09	2,85:1	4000	4,1	0,85	0,000213	2,5
BGM41	1:1	4000	22,0	0,85	0,000438	3,4
BGM41	2:1	4000	15,8	0,85	0,000342	3,7
BGM41	3:1	4000	16,7	0,85	0,000583	4,6
BGM81	1:1	4000	29,0	0,85	0,000836	12,1
BGM81	2,25:1	4000	32,3	0,85	0,001051	12,9
BGM81	3,13:1	4000	30,3	0,85	0,001439	14

i = gear ratio
nmax = max. input speed
Mmax = max. input torque
η = efficiency factor
J = inertia

BGM Belt Gears, compatibility table

Gear	WM/V/Z60	WM/V80	WM/V120	MLSM80D	WB60	M50	M55	M75	M100	Z2
BGM09	•				•	•	•	•		
BGM41	•	•						•	•	•
BGM81			•	•						

BGM Belt Gears, ordering keys

See next page for ordering keys.

Accessories

Gears and Transmission Kits

BGM 09 Belt Gears, ordering key

	1	2	3	4	5	6	7	8
Example	BGM09	-2	-CC	063	P	050	X	+XX

1. Type and size of belt gear
BGM09 = BGM belt gear size 09

2. Gear ratio
-1 = 1,04:1
-2 = 1,85:1
-3 = 2,85:1

3. Type of couplings
-CC = conical couplings

4. Motor size[1]
063 = IEC 63 B14
071 = IEC 71 B14
S80 = servo motor size 80
AK4 = servo motor type AKM 4

5. Type of mounting
P = standard

6. Compatible unit type
W06 = WM60, WV60, WZ60
WB6 = WB60
050 = M50
060 = M55
070 = M75

7. Clevis option
X = no clevis option
S = clevis option type S

8. Protection
+XX = standard
+S1 = wash down protection

[1]This is only a selection of all motors that fit this gear. Please contact customer support to see if your preferred motor fits the gear.

BGM 41 Belt Gears, ordering key

	1	2	3	4	5	6	7	8
Example	BGM41	-1	-CC	071	P	070	X	+S1

1. Type and size of belt gear
BGM41 = BGM belt gear size 41

2. Gear ratio
-1 = 1:1
-2 = 2:1
-3 = 3:1

3. Type of couplings
-CC = conical couplings

4. Motor size[1]
071 = IEC 71 B14
080 = IEC 80 B14
S80 = servo motor size 80
S95 = servo motor size 95
AK5 = servo motor type AKM 5

5. Type of mounting
P = standard

6. Compatible unit type
W06 = WM60, WV60, WZ60
W08 = WM80, WV80
070 = M75
10B = M100 (MF/G10B)
10K = M100 (MF/G10K/C/D)

7. Clevis option
X = no clevis option
S = clevis option type S

8. Protection
+XX = standard
+S1 = wash down protection

[1]This is only a selection of all motors that fit this gear. Please contact customer support to see if your preferred motor fits the gear.

Accessories

Gears and Transmission Kits

BGM 81 Belt Gears, ordering key

	1	2	3	4	5	6	7	8
Example	BGM81	-1	-CC	090	P	M8D	X	+XX

1. Type and size of belt gear
BGM81 = BGM belt gear size 81

2. Gear ratio
-1 = 1:1
-2 = 2,25:1
-3 = 3,13:1

3. Type of couplings
-CC = conical couplings

4. Motor size[1]
090 = IEC 90 B14
100 = IEC 100/121 B14
A20 = servo motor size A200
AK6 = servo motor type AKM 6

5. Type of mounting
P = standard

6. Compatible unit type
W12 = WM120, WV120
M8D = MLSM80D

7. Clevis option
X = no clevis option
S = clevis option type S
R = clevis option type R

8. Protection
+XX = standard
+S1 = wash down protection

[1]This is only a selection of all motors that fit this gear. Please contact customer support to see if your preferred motor fits the gear.

Accessories

Gears and Transmission Kits

Micron DT, DTR Planetary Gears, compatibility and dimensions

Unit	Gear	i	□A	B	C	□D	E	Weight [kg]	Backlash [arc min]	Efficiency [%]
WH50	DT60-SS	3:1 - 10:1	89,7	60	–	–	–	1	8	90
	DT60-DS	15:1 - 100:1	106,9	60	–	–	–	1,2	9	85
	DTR60-SS	5:1 - 50:1	–	–	110,2	104,1	60	2,5	9	90
	DTR60-DS	60:1 - 500:1	–	–	127,3	104,1	60	2,7	9	85
WH80	DT90-SS	3:1 - 10:1	110,9	90	–	–	–	3	9	90
	DT90-DS	15:1 - 100:1	133,5	90	–	–	–	3,7	9	85
	DTR90-SS	5:1 - 50:1	–	–	145,4	138,2	90	4,8	9	90
	DTR90-DS	60:1 - 500:1	–	–	168,0	138,2	90	5,5	9	85
WH120	DT115-SS	3:1 - 10:1	136,4	110	–	–	–	12,7	8	90
	DT115-DS	15:1 - 100:1	167,4	110	–	–	–	16,2	9	85
	DTR115-SS	5:1 - 50:1	–	–	185,7	173,5	115	11	8	90
	DTR115-DS	60:1 - 500:1	–	–	216,7	173,5	115	12	9	85
WM60Z	DT60-SS	3:1 - 10:1	89,7	60	–	–	–	1	8	90
	DT60-DS	15:1 - 100:1	106,9	60	–	–	–	1,2	9	85
	DTR60-SS	5:1 - 50:1	–	–	110,2	104,1	60	2,5	9	90
	DTR60-DS	60:1 - 500:1	–	–	127,3	104,1	60	2,7	9	85
WM80Z	DT90-SS	3:1 - 10:1	110,9	90	–	–	–	3	9	90
	DT90-DS	15:1 - 100:1	133,5	90	–	–	–	3,7	9	85
	DTR90-SS	5:1 - 50:1	–	–	145,4	138,2	90	4,8	9	90
	DTR90-DS	60:1 - 500:1	–	–	168,0	138,2	90	5,5	9	85

Micron gears can only be used on units without a RediMount flange. Micron DT and DTR planetary gears comes mounted on the unit from factory.

i = gear ratio

DT

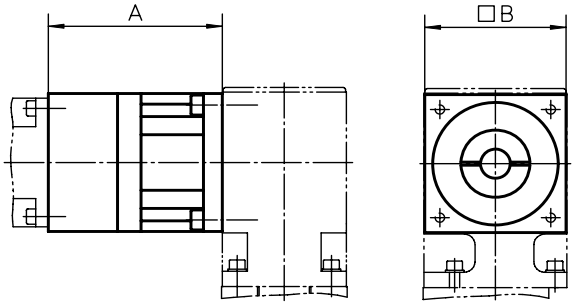

DTR

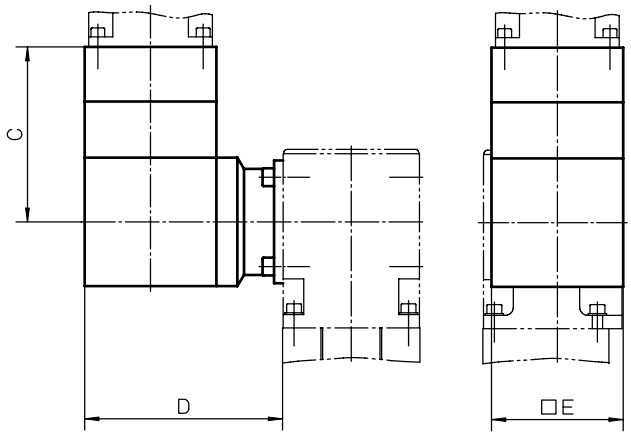

Left side

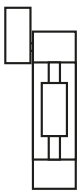

Right side

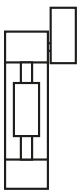

Position 1

Position 2

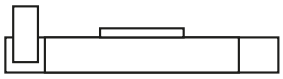

Position 3

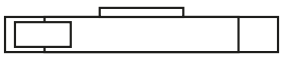

Position 4

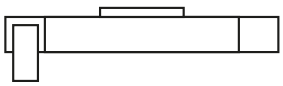

Accessories

Gears and Transmission Kits

Micron DT, DTR Planetary Gears, how to order

When ordering a DT or DTR planetary gear you need to state the size and type of gear, which side of the unit the gear shall be installed, the gear ratio and which motor that you wish to use. For DTR you also must state the preferred mounting position of the gear. With this information we can check if your choice of motor is possible or not and give you the correct ordering code for the gear.

Micron DT, ordering data

1. Size of planetary gear
DT60
DT90
DT115

2. Type of gear
-SS
-DS

3. Mounting side of the unit
Left
Right

4. Gear ratio
3:1 (only for -SS models)
5:1 (only for -SS models)
10:1 (only for -SS models)
15:1 (only for -DS models)
25:1 (only for -DS models)
30:1 (only for -DS models)
50:1 (only for -DS models)
100:1 (only for -DS models)

5. Motor
Specify your choice of motor.

Micron DTR, ordering data

1. Type and size of planetary gear
DTR60
DTR90
DTR115

2. Type of gear
-SS
-DS

3. Mounting position of the gear
Position 1
Position 2
Position 3
Position 4

4. Mounting side of the unit
Left
Right

5. Gear ratio
5:1 (only for -SS models)
6:1 (only for -SS models)
9:1 (only for -SS models)
10:1 (only for -SS models)
12:1 (only for -SS models)
15:1 (only for -SS models)
20:1 (only for -SS models)
25:1 (only for -SS models)
30:1 (only for -SS models)
40:1 (only for -SS models)
50:1 (only for -SS models)
60:1 (only for -DS models)
75:1 (only for -DS models)
90:1 (only for -DS models)
100:1 (only for -DS models)
120:1 (only for -DS models)
125:1 (only for -DS models)
150:1 (only for -DS models)
200:1 (only for -DS models)
250:1 (only for -DS models)
300:1 (only for -DS models)
400:1 (only for -DS models)
500:1 (only for -DS models)

6. Motor
Specify your choice of motor.

Accessories

Gears and Transmission Kits

VWZ Intermediate Shafts, dimensions

Shaft	øA	B	C	D	øE	F min.	G
VWZ-30	32	15	1,5	34	30	99	M4
VWZ-40	42	17	1,5	46	40	133	M5
VWZ-60	56	30	2	63	60	177	M6
VWZ-60V	67	35	2	73	60	205	M8
VWZ-80	82	40	2	84	80	249	M10
VWZ-100	102	50	2	97	100	283	M12

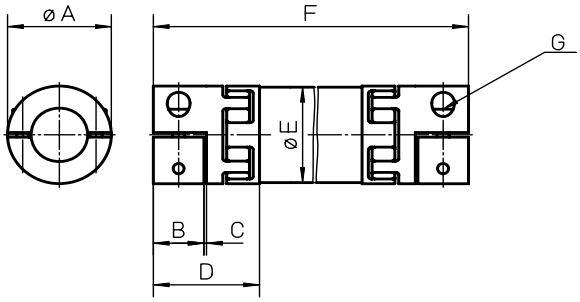

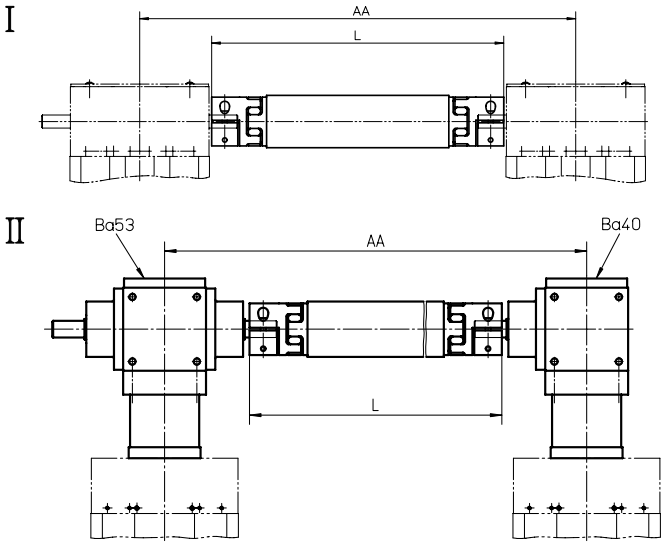

The VWZ intermediate shafts can be installed in two ways. Either directly to belt driven units (I) or to screw driven units using KRG bevel gears (II) of type VL50, VL100 or VL200. However, belt driven units with a RediMount flange can not be combined with VWZ shafts while screw driven units can, but in which case the unit must be ordered with the RediMount ID code that fits the bevel gear in question. The intermediate shaft includes tube and couplings.

Critical Speed of Shaft

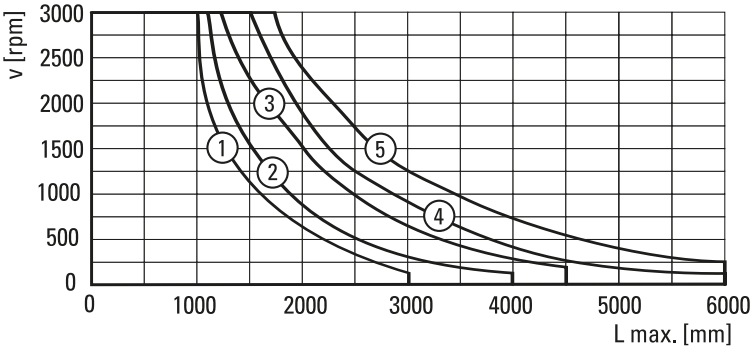

1: VWZ-30
2: VWZ-40
3: VWZ-60 and VWZ-60V
4: VWZ-80
5: VWZ-100

VWZ Intermediate Shafts, data

Shaft	Mmax [Nm]	Gs [kg/m]	Gc [kg]	Js [kgm²/m]	Jc [kgm²]	Ms [Nm]
VWZ-30	4,8	0,58	0,14	0,00011	0,00001	4
VWZ-40	6,4	0,76	0,36	0,00020	0,00008	8
VWZ-60	22,7	0,97	0,94	0,00080	0,00024	15
VWZ-60V	60,6	0,97	1,42	0,00080	0,00046	35
VWZ-80	122,7	2,00	2,98	0,00300	0,00240	70
VWZ-100	169,7	2,47	4,62	0,00580	0,00600	120

Mmax = max. shaft torque Gc = weight of coupling Jc = inertia of coupling
Gs = weight of shaft Js = inertia of shaft Ms = tightening torque

Accessories

Gears and Transmission Kits

VWZ Intermediate Shafts, compatibility table

Unit	I	I I	VWZ-30	VWZ-40	VWZ-60	VWZ-60V	VWZ-80	VWZ-100	AA [mm]
WH40	•			•					AA = L + 56
WH50 / WHZ50	•				•				AA = L + 54
WM60Z	•				•				AA = L + 64
WH80 / WHZ80	•					•			AA = L + 84
WH120	•							•	AA = L + 124
WM80Z	•					•			AA = L + 84
MLSH60Z	•					•			AA = L + 164
WB40 / WM40		VL50	•						AA = L + 170
WB60		VL100			•				AA = L + 184
WM60 / WV60 / WZ60		VL100			•				AA = L + 184
WM80 / WV80 / MLSM60D		VL100				•			AA = L + 176
MLSM80Z	•						•		AA = L + 244
WM120 / WV120 / MLSM60D / MLSM80D		VL200					•		AA = L + 244

AA = C/C distance between units
L = total length of shaft and coupling assembly

VWZ Intermediate Shafts, ordering key

	1	2	3
Example	VWZ-060	-02	-0700

1. Intermediate shaft size
VWZ-030 = VWZ-30
VWZ-040 = VWZ-40
VWZ-060 = VWZ-60
VWZ-06V = VWZ-60V
VWZ-080 = VWZ-80
VWZ-100 = VWZ-100

2. Type of unit and type of mounting
-01 = WH40 for type I mounting
-02 = WH50 / WHZ50 for type I mounting
-03 = WM80Z for type I mounting
-04 = WH80 / WHZ80 for type I mounting
-05 = WH120 for type I mounting
-06 = WM60Z for type I mounting
-07 = MLSH60Z for type I mounting
-08 = WB40 / WM40 for type II mounting on VL5O gears
-09 = WB60 for type II mounting on VL100 gears
-10 = WM60 / WV60 / WZ60 for type II mounting on VL100 gears
-11 = WM80 / WV80 / MLSM60D for type II mounting on VL100 gears
-12 = MLSM80Z for type I mounting
-13 = WM120 / WV120 / MLSM60D / MLSM80D for type II mounting on VL200 gears

3. C/C distance between units (AA)
- xxxx = distance in mm

Accessories

Gears and Transmission Kits

DSP Intermediate Shafts, data

Shaft	Weight of shaft [kg]	Max. speed [rpm]	Shaft diameter [mm]
DSP-05B	0,3 + 1,3 × Lm	1500	20
DSP-06B	0,3 + 1,3 × Lm	1500	20
DSP-07B	0,6 + 2,6 × Lm	1500	30
DSP-10B	0,6 + 2,6 × Lm	1500	30
DSB--ZB	0,6 + 2,6 × Lm	1500	30
DSP-TBS	0,6 + 2,6 × Lm	1500	30

Lm = C/C distance between units in cm

The DSP intermediate shaft can be installed directly between two belt driven units or between two screw driven units using a TBS worm gear. The DSP shaft can not be used on units with a Redi-Mount flange. Couplings and tube are included in the shipment. Support bearings may need to be installed if the critical speed of the shaft is exceeded. See diagram. Support bearings can be ordered from your local bearing supplier.

DSP-05B/06B/07B/10B/-ZB

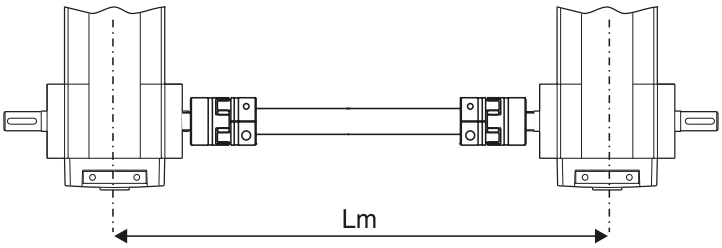

DSP-TBS

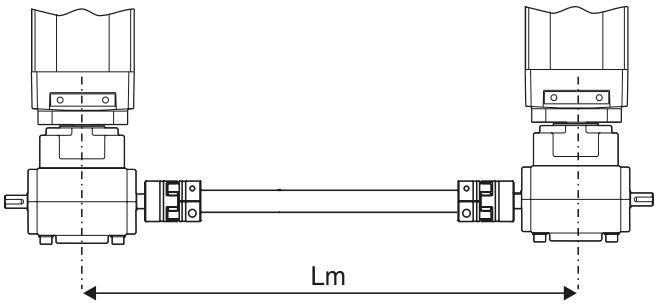

Critical Speed of Shaft

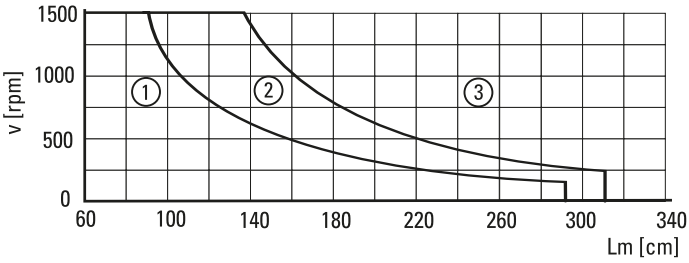

1: No support bearing required
2: Support bearing required for DSP-05B and DSP-06B
3: Support bearing always required

Accessories

Gears and Transmission Kits

DSP Intermediate Shafts, compatibility table

Unit	Drive type	DSP-05B	DSP-06B	DSP-07B	DSP-10B	DSP--ZB	DSP-TBS
M50	belt	•					
M55	belt		•				
M75	belt			•			
M100	belt				•		
ZB	belt					•	
M55	screw						•
M75	screw						•
M100	screw						•

DSP Intermediate Shafts, ordering key

	1	2
Example	DSP-06B	-305

1. Intermediate shaft size and type
DSP-05B = for belt driven M50 units
DSP-06B = for belt driven M55 units
DSP-07B = for belt driven M75 units
DSP-10B = for belt driven M100 units
DSP--ZB = for belt driven ZB units
DSP-TBS = for screw driven M55, M75 or M100 units with TBS worm gear

2. C/C distance between units in cm (Lm)
- xxx = length in cm

Accessories

Gears and Transmission Kits

Spring Set Brake

Unit type	p/n	Nema size	Static torque [lbf-in]	Supply voltage [VDC]	Dimensions [in]							Brake hub p/n[1]	Brake adaptor p/n
					F	G	H	J	K	L	HEX		
2DB08	TEB23A	23	NEMA 23	24	2.25	1.10	0.11	2.25	0.22	2.625	5/8	HEXHUB23A	MB08-23
2DB12	TEB23B	23	NEMA 23	24	2.25	1.10	0.11	2.25	0.22	2.625	5/8	HEXHUB23B	none required
2HB10, 2RB12	TEB23D	23	NEMA 23	24	2.25	1.10	0.11	2.25	0.22	2.625	5/8	HEXHUB23D	none required
2RB16	TEB23E	23	NEMA 23	24	2.25	1.10	0.11	2.25	0.22	2.625	5/8	HEXHUB23E	none required
2DB16	TEB34A	34	NEMA 34	24	2.25	1.10	0.11	3.25	0.22	3.875	5/8	HEXHUB34A	none required
2HB20	TEB34C	34	NEMA 34	24	2.25	1.31	0.11	3.25	0.22	3.875	7/8	HEXHUB34A	none required

[1] Hub included in spring set brake

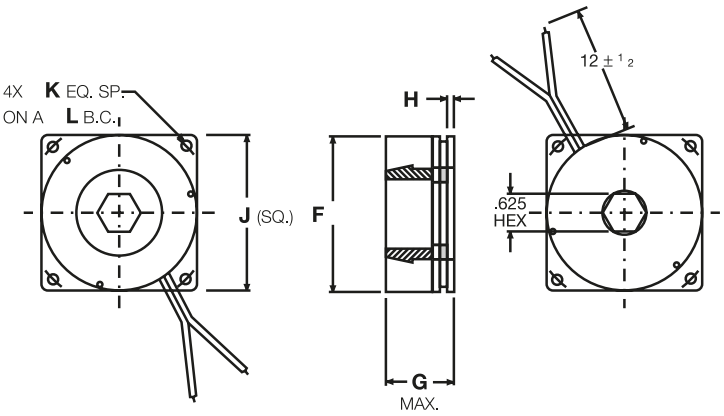

Mounts to support end of 2HB, 2RB, and 2DB units. The brake engages upon loss of power and provides resistance to back drive rotation of ball screws due to gravitational forces when power is interrupted to the brake unit. They are pre-burnished for maximum torque capacity and come with standard NEMA 23, 34 or 42 mounting patterns for easy field retrofit. Compact size minimizes change to the overall system envelope. The 2HB, 2RB, and 2DB ordering keys can be configured with the brake as part of the assembly. See ordering keys or www.LinearMotioneering.com for details. The part numbers listed here are for the brake parts as separate items.

Spring Set Brake Hubs

Brake type	p/n	Unit type	Set screw torque [in-lb][1]	Dimensions [in (mm)]				
				A	B	C	D	E
TEB23A	HEXHUB23A	2DB08	36	1.53	3/16	0.15	#10/32	5/8
TEB23B	HEXHUB23B	2DB12	36	1.31	1/4	0.26	#10/32	5/8
TEB23D	HEXHUB23D	2HB10, 2RB12	36	(20)	(8)	(5)	M4	5/8
TEB23E	HEXHUB23E	2RB16	36	(20)	(20)	(5)	M4	5/8
TEB34A	HEXHUB34A	2DB16	36	1.67	3/8	0.44	#10/32	5/8
TEB34C	HEXHUB34A	2HB20	36	(32)	14	(6)	M5	7/8

[1] It is suggested a serviceable thread locking compound be used.

HEXHUB •••

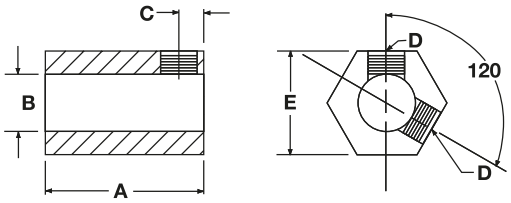

SPLHUB42A

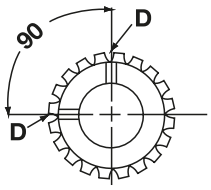

Accessories

Electrical Feedback Devices

Limit Switch Brackets[1]

Unit type	I	For limit switch type	I I	For limit switch type
M50	D393 035	ZCM-D21	–	–
M55	D313 427	ZCM-D21	D313 428	ZCM-D21
M75	D312 860	XCK-M115	D312 861	XCK-M115
M100	D312 330	XCK-M115	D312 331	XCK-M115

[1] No limit switches included in the shipment.

I

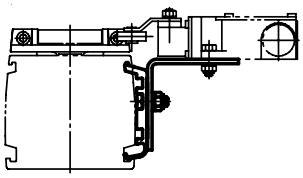

II

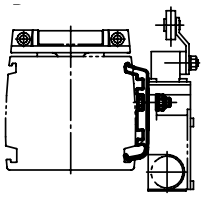

Limit Switch Brackets for Z3

Unit type	p/n	For limit switch type
Z3	D800 042	XCK-M115

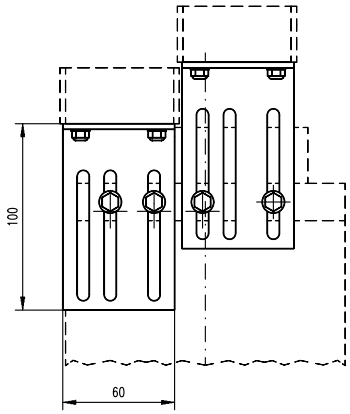

The limit switch brackets are adjustable in height. The limit switches on the brackets are operated by the maximum extended and maximum retracted end of stroke bars on top of the Z3 units. Two brackets are required.

Limit Switches

Switch type	p/n	Protection degree	Contacts	Cable
XCK-M115	D535 107	IP67	NO + NC	–
ZCM-D21	D535 102	IP67	NO + NC	1 meter

Accessories

Electrical Feedback Devices

Sensor Brackets for Cylindrical Sensors[1]

Unit type	I	For sensor diameter	I I	For sensor diameter
M55	D313 429	M12	D313 430	M12
M75	D312 862	M18	D312 863	M18
M100	D312 332	M18	D312 333	M18

[1] no sensors included in the shipment

I

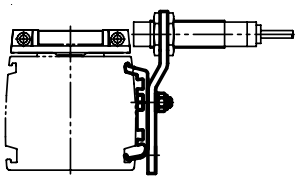

II

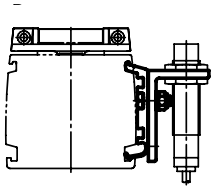

Cylindrical Inductive Sensors

Sensor type	p/n	Diameter	Input voltage	Max. current	Protection degree	Contacts	Cable
PNP	D535 085	M12	12 - 48 Vdc	0,2 A	IP67	NO	connector
PNP	D535 089	M18	12 - 48 Vdc	0,2 A	IP67	NO	connector

Cylindrical Inductive Sensor Connectors

For sensor diameter	p/n
M12	D535 092
M18	D535 091

Accessories

Electrical Feedback Devices

Sensor Packages

Unit type	Package type	p/n	Output type	Output operation	Frequency [1]	Supply voltage [VDC]	Cable length [m]	Sdetract [mm]
2HB10	One home sensor	LSP2HBM10-N-1	NPN	NO	1 × V	12 - 24	5	-
		LSP2HBM10-P-1	PNP	NO	1 × V	12 - 24	5	-
	Two limit switch sensors	LSP2HBM10-N-2	NPN	NC	2 × S	12 - 24	5	30
		LSP2HBM10-P-2	PNP	NC	2 × S	12 - 24	5	30
	One home and two limit switch sensors	LSP2HBM10-N-3	NPN	1 × NC, 2 × NO	1 × V, 2 ×S	12 - 24	5	30
		LSP2HBM10-P-3	PNP	1 × NC, 2 × NO	1 × V, 2 ×S	12 - 24	5	30
2HB20	One home sensor	LSP2HBM20-N-1	NPN	NO	1 × V	12 - 24	5	-
		LSP2HBM20-P-1	PNP	NO	1 × V	12 - 24	5	-
	Two limit switch sensors	LSP2HBM20-N-2	NPN	NC	2 × S	12 - 24	5	30
		LSP2HBM20-P-2	PNP	NC	2 × S	12 - 24	5	30
	One home and two limit switch sensors	LSP2HBM20-N-3	NPN	1 × NC, 2 × NO	1 × V, 2 ×S	12 - 24	5	30
		LSP2HBM20-P-3	PNP	1 × NC, 2 × NO	1 × V, 2 ×S	12 - 24	5	30
2RB12	One home sensor	LSP2RM12-N-1	NPN	NO	1 × V	12 - 24	5	-
		LSP2RM12-P-1	PNP	NO	1 × V	12 - 24	5	-
	Two limit switch sensors	LSP2RM12-N-2	NPN	NC	2 × S	12 - 24	5	35
		LSP2RM12-P-2	PNP	NC	2 × S	12 - 24	5	35
	Home and limit switch sensors	LSP2RM12-N-3	NPN	1 × NC, 2 × NO	1 × V, 2 ×S	12 - 24	5	35
		LSP2RM12-P-3	PNP	1 × NC, 2 × NO	1 × V, 2 ×S	12 - 24	5	35
2RB16	One home sensor	LSP2RM16-N-1	NPN	NO	1 × V	12 - 24	5	-
		LSP2RM16-P-1	PNP	NO	1 × V	12 - 24	5	-
	Two limit switch sensors	LSP2RM16-N-2	NPN	NC	2 × S	12 - 24	5	35
		LSP2RM16-P-2	PNP	NC	2 × S	12 - 24	5	35
	One home and two limit switch sensors	LSP2RM16-N-3	NPN	1 × NC, 2 × NO	1 × V, 2 ×S	12 - 24	5	35
		LSP2RM16-P-3	PNP	1 × NC, 2 × NO	1 × V, 2 ×S	12 - 24	5	35

[1] V = varied frequency. S = standard frequency.

LIMIT SWITCH POSITION 2HBE

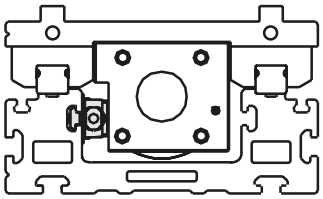

LIMIT SWITCH POSITION 2RB

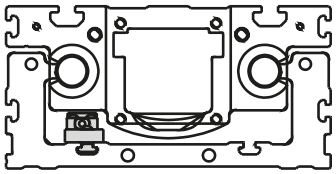

Each 2HB and 2RB can be equipped with sensors inside of the profile where they are protected from mechanical damage. The systems are provided with access holes on each side of each end plate for passage of the sensor package cable. Using limit switch sensors will reduce the effective stroke. The standard position will approximately reduce the stroke by the distance listed in the Sdetract column. The 2HB, 2RB, 2HE and 2RE ordering keys can be configured with the limit switches and/or a home sensor as part of the assembly. See ordering keys or www.LinearMotioneering.com for details. The part numbers listed above are for the limit switches and/or home sensors as separate items.

Accessories

Electrical Feedback Devices

EN2 Inductive Sensors, part numbers

Sensor type	Cable length [m]	p/n
Normally closed	2	671 545 0305
Normally open	2	671 545 0304
Normally closed	10	671 545 0307
Normally open	10	671 545 0306

To be able to mount the EN2 inductive sensors on a unit the ENT14x16 sensor rail is required (see page 178) except for units WM120 and WV120 where they can be fitted directly to the profile of the unit.

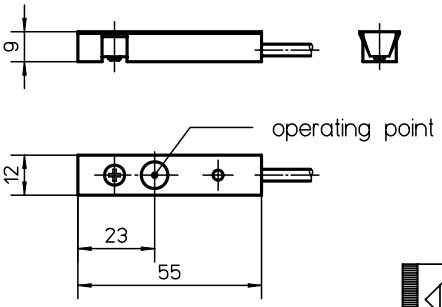

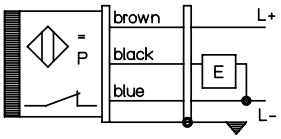

EN2 Inductive Sensors, data

Parameter		EN2
Supply voltage	[Vdc]	10 – 30
Max. load current	[A]	0,2
Operating distance	[mm)	2
LED indicator for switch		yes
Protection class		IP67
Cable type		screened
Weight with cable L = 2 m with cable L= 10 m	[kg]	 0,04 0,19

Magnetic Sensors, data

Parameter		
Max. power	[W]	10
Max. voltage	[Vdc]	100
Max. current	[A]	0,5
LED indicator for switch		no
Protection class		IP67
Cable length	[m]	3
Cable cross section	[mm²]	2 × 0,15
Operating temperature limits	[°C]	-25 – 65
Weight	[kg]	0,050

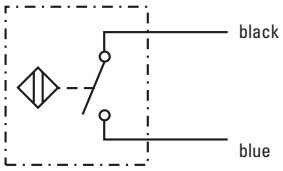

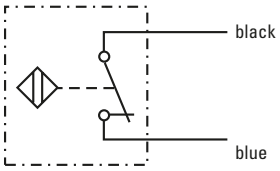

Magnetic Sensors, part numbers

Sensor type	suitable units	p/n
Normally closed	M50, Z2, Z3	D535 071
Normally open	M50, Z2, Z3	D535 070

On M50 the magnetic sensors are mounted directly in the sensor slot of the profiles of the units and require no mounting bracket while Z2 and Z3 require magnetic sensor mounting brackets. The sensor is fixed in position by two M3 size locking screws (A1). The cable (A2) is molded into the sensor.

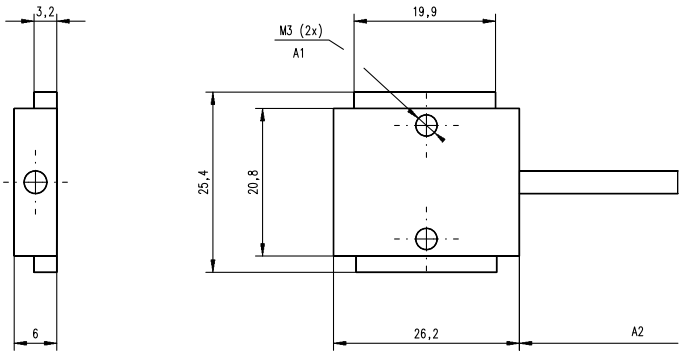

Accessories

Electrical Feedback Devices

IG602 Encoders, data

Parameter		IG602
Supply voltage Type 1 Type 2	[Vdc]	 5 ±10% 10 – 30
Output type Type 1 Type 2		 line driver push-pull
Pulses per revolution Type 1 Type 2	[ppr]	 100 – 2500 100 – 600
Length (L) Type 1 Type 2	[mm]	 51,5 56,0
Weight Type 1 Type 2	[kg]	 0,36 0,36

The IG602 encoders come with mounting screws but no coupling or connector. To be able to mount the encoder to the unit, the unit must have a shaft for encoders. See the ordering keys of the units. The encoders can also be ordered mounted to the unit from factory. See ADG encoder option kit on page 170.

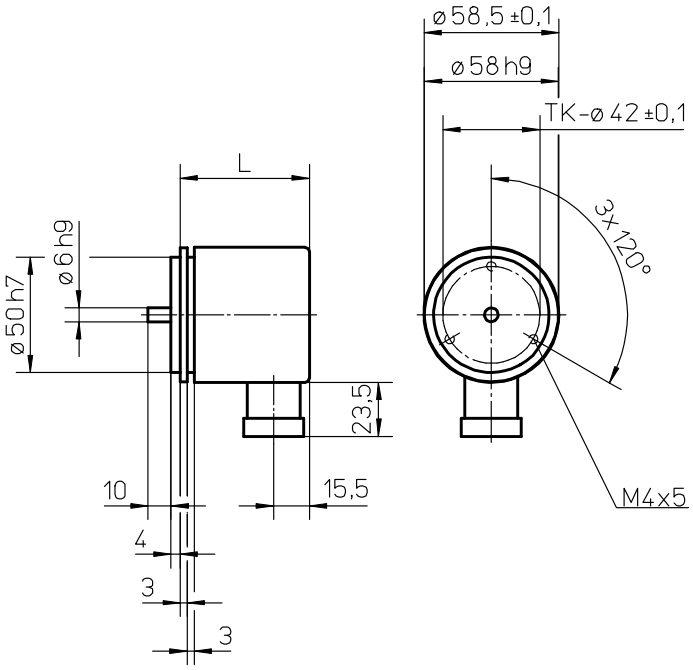

IG602 Encoders, part numbers

Encoder type	Supply voltage [Vdc]	Pulses per revolution	p/n
Type 1	5	100	671 521 0194
Type 1	5	200	671 521 0195
Type 1	5	500	671 521 0196
Type 1	5	600	671 521 0197
Type 1	5	1000	671 521 0198
Type 1	5	1250	671 521 0199
Type 1	5	1500	671 521 0200
Type 1	5	2000	671 521 0192
Type 1	5	2500	671 521 0201
Type 2	10 – 30	100	671 521 0193
Type 2	10 – 30	200	671 521 0202
Type 2	10 – 30	500	671 521 0203
Type 2	10 – 30	600	671 521 0204
Type 2	10 – 30	600	

STE001 Encoder Connector, data

Parameter		STE001
Number of poles		12
Protection class		IP67
Execution		jack
Cable entrance		straight
Weight	[kg]	0,04
Part number		6715600153

Encoder Cable, data

Parameter	p/n
5 m cable length	671 555 0068
10 m cable length	671 555 0069

The encoder cables come fitted with a STE001 encoder connector in one of the ends.

Accessories

Electrical Feedback Devices

ES Limit Switch Option Kit

Unit type	I	II	III	A	B	C	D	E	F	G
WH50 [1]	•			34	60,5	10	26	49	58,5	196
WH80	•			31	76	10	39	49	78,5	196
WH120	•			34	88	10	51	49	78,5	196
WHZ50	•			34	61	10	26	49	58,5	196
WHZ80	•			31	76	10	39	49	78,5	196
WM60		•		40	69	32	38	50	63	200
WM80		•		40	73	32	42	50	79	200
WM120		•		40	89	32	58	50	94	200
WM60Z	•			40	69	32	38	50	73	200
WM80Z [2]	•			40	73	32	42	50	99 (89)	200
WV60		•		40	69	32	38	50	33	200
WV80		•		40	73	32	42	50	39	200
WV120		•		40	89	32	58	50	59	200
MLSM60D		•		40	73	32	32	50	79	200
MLSH60Z	•			40	73	32	42	50	79	200
MLSM80D		•		40	85	32	54	50	101	200
MLSM80Z		•		40	85	32	54	50	101	200
WZ60 [1]			•	60	22,5	16	30	113	53	–
WZ80 [1]			•	60	22,5	16	30	112	84	–

[1] Limit switches for these units can not be moved. On all other units the switches can be re-positioned by the customer. [2] Value in brackets = for short carriage.

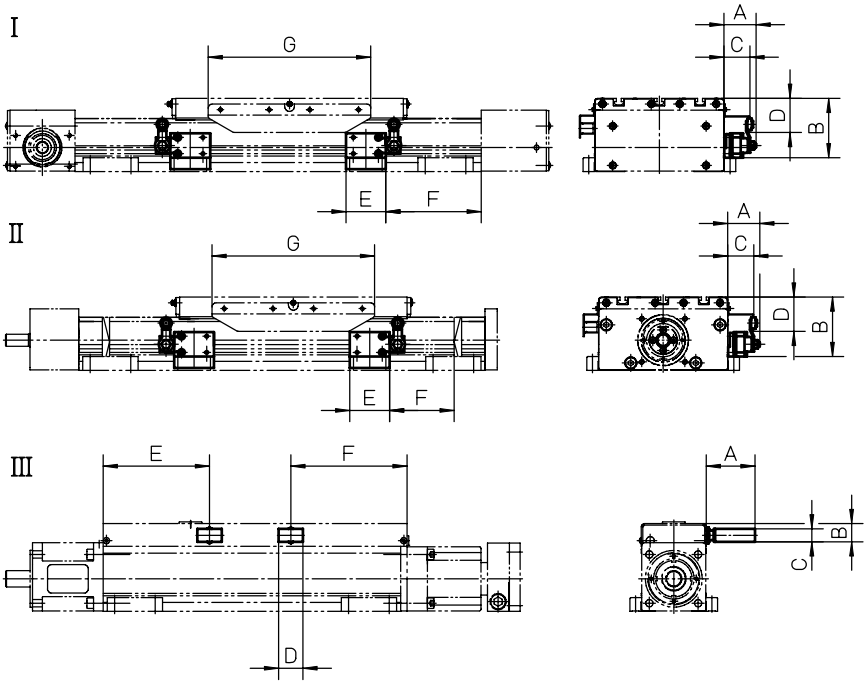

The ES limit switch assembly is an option that is mounted at the factory. The limit switches are placed 10 mm from the mechanical ends of the unit. Each limit switch has one NO and one NC contact with positive opening action. Protection degree is IP67. Type I and II switches can be repositioned along the profile by the customer. Note! The ES limit switch option and any of the sensor rail options ENT14x16, ENF14x16 or ENK can not be mounted on the same side of the unit.

Accessories

Electrical Feedback Devices

ES Limit Switch Option Kit, ordering key

	1	2	3	4
Example	ESK07	-L	-01	-10

1. Compatible unit
ESK02 = WH50
ESK03 = WH80
ESK04 = WH120
ESK05 = WM40
ESK06 = WM60 / WM60Z
ESK07 = WM80 / WM80Z
ESK08 = WM120
ESK09 = WV60
ESK10 = WV80
ESK11 = WV120
ESK12 = WHZ50
ESK13 = WHZ80
ESK14 = WZ60
ESK15 = WZ80
ESK16 = MLSH60Z
ESK18 = MLSM80Z
ESK19 = MLSM60D
ESK20 = MLSM80D

2. Mounting side of the unit
-L = left side
-R = right side

3. Switch configuration on side A
-00 = no switch on side A
-01 = switch with 1 m cable
-05 = switch with 5 m cable
-10 = switch with 10 m cable

4. Switch configuration on side B
-00 = no switch on side B
-01 = switch with 1 m cable
-05 = switch with 5 m cable
-10 = switch with 10 m cable

ES-••-R-••-••

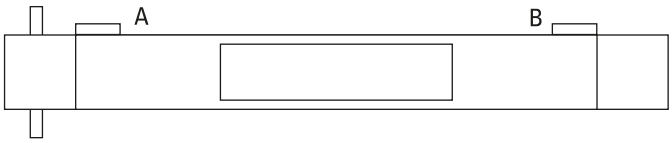

ES-••-L-••-••

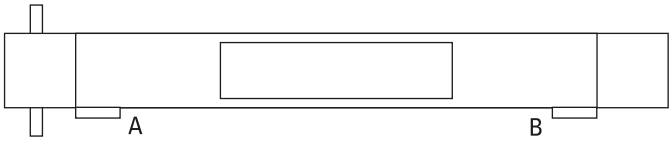

Accessories

Electrical Feedback Devices

ENT14x16 Inductive Sensor Rail

Unit type	p/n
WH40 / WH50 / WH80 / WH120 / WHZ50 / WHZ80 / WM40 / WM60 / WM80 / WM60Z / WM80Z / WV60 / WV80 / MLSM60D / MLSM80D / MLSH60Z / MLSM80Z / WZ60 / WZ80 / WB40 / WB60	671 545 0283

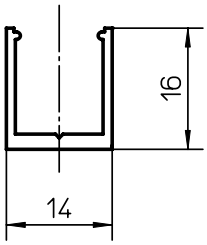

The ENT14x16 inductive sensor rail is mounted to the side of a unit or along any type of beam or profile. Sensors of type EN2 can be mounted in the rail. The rail can also serve as a cable duct for the sensor cables. The rail is sealed with a cover which comes with the rail. The rail comes in lengths of max 3000 mm. Drilling in the profile of the unit is required when mounting the rail. When ordering, specify part number and length of the rail. Note1! WM120 and WV120 units do not require any rail as the EN2 sensors can be fitted directly to the profile of the units. Note2! ES limit switch option and ENT14x16 rail can not be mounted on the same side of the unit.

ENF and ENK Inductive Sensor Rail Option Kit, compatibility table

Unit type	ENF / ENK
WH40 / WH50 / WH80 / WH120 / WHZ50 / WHZ80 / WM40 / WM60 / WM80 / WM60Z / WM80Z / WV60 / WV80 / MLSM60D / MLSM80D / MLSH60Z / MLSM80Z / WZ60 / WZ80 / WB40 / WB60 / M50 / M75 / M100	•

ENF

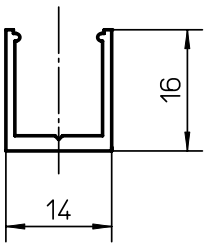

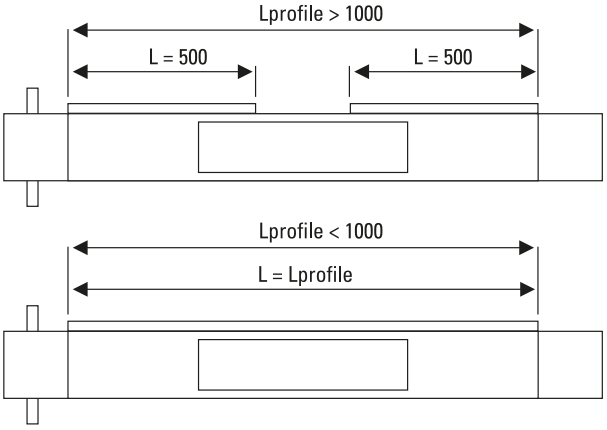

ENK

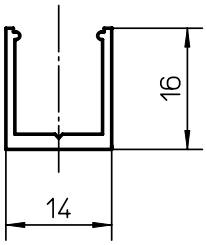

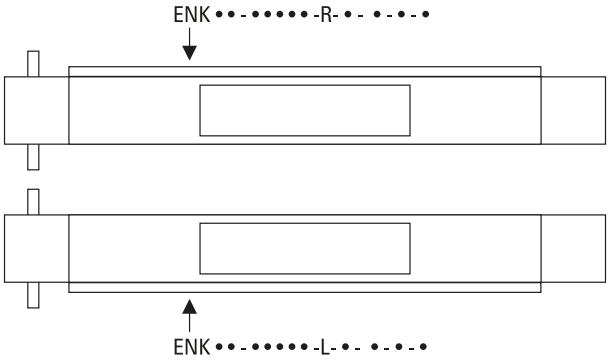

The ENF and ENK inductive sensor rail option kits are mounted at the factory. The ENF option consists of two 500 mm long ENT14x16 sensor rails mounted in each end of the unit on the left or right side of the profile. In cases where the unit is too short to allow two 500 mm sensor rails to be mounted, then one rail is mounted along the entire profile of the unit. The ENK option also consists of ENT14 x16 sensor rails but the ENK option has sensor profiles that run along the entire profile of the unit. In the shipment of both ENF and ENK the specified amount and type of EN2 sensors are included. The sensors are fitted to the sensor rail by the customer at the desired positions.

Note1! WM120 and WV120 units do not require any ENF or ENK options as the EN2 sensors can be fitted directly to the profile of the units.
Note2! The ES limit switch option and ENF rail can not be mounted on the same side of the unit.
Note3! Movopart M50/75/100 units require adapter plates for mounting the ENF/ENK to the profile. See page 135 for adapter plate dimensions.

Accessories

Electrical Feedback Devices

ENK and ENF Inductive Sensor Rail Option Kit, ordering key

	1	2	3	4	5	6	7	8
Example	ENK16	-S	-04000	-R	-2	-0	-1	-6

1. Type of rail and compatible unit

ENK01 = ENK rail for WH40	ENF01 = ENF rail for WH40
ENK02 = ENK rail for WH50	ENF02 = ENF rail for WH50
ENK03 = ENK rail for WH80	ENF03 = ENF rail for WH80
ENK04 = ENK rail for WH120	ENF04 = ENF rail for WH120
ENK05 = ENK rail for WM40	ENF05 = ENF rail for WM40
ENK06 = ENK rail for WM60 / WV60	ENF06 = ENF rail for WM60 / WV60
ENK07 = ENK rail for WM80 / WV80	ENF07 = ENF rail for WM80 / WV80
ENK08 = ENK rail for WM120 / WV120	ENF08 = ENF rail for WM120 / WV120
ENK09 = ENK rail for WM60Z	ENF09 = ENF rail for WM60Z
ENK10 = ENK rail for WM80Z	ENF10 = ENF rail for WM80Z
ENK11 = ENK rail for WHZ50	ENF11 = ENF rail for WHZ50
ENK12 = ENK rail for WHZ80	ENF12= ENF rail for WHZ80
ENK13 = ENK rail for WZ60	ENF13 = ENF rail for WZ60
ENK14 = ENK rail for WZ80	ENF14 = ENF rail for WZ80
ENK15 = ENK rail for MLSH60Z	ENF15 = ENF rail for MLSH60Z
ENK17 = ENK rail for MLSM80Z	ENF17 = ENF rail for MLSM80Z
ENK18 = ENK rail for MLSM60D	ENF18 = ENF rail for MLSM60D
ENK19 = ENK rail for MLSM80D	ENF19 = ENF rail for MLSM80D
ENK20 = ENK rail for WB40	ENF20 = ENF rail for WB40
ENK21 = ENK rail for WB60	ENF21 = ENF rail for WB60
ENK28 = ENK rail for MF/MG07K	ENF28 = ENF rail for MF/MG07K
ENK29 = ENK rail for MF/MG06K	ENF29 = ENF rail for MF/MG06K
ENK30 = ENK rail for MF/MG06B	ENF30 = ENF rail for MF/MG06B
ENK31 = ENK rail for MF/MG07B	ENF31 = ENF rail for MF/MG07B
ENK32 = ENK rail for MF/MG10K	ENF32 = ENF rail for MF/MG10K
ENK33 = ENK rail for MF/MG10B	ENF33 = ENF rail for MF/MG10B

2. Number of carriages
-S = single carriage
-D = double carriages

3. Total length of unit (L tot)
- vvvvv = distance in mm

4. Mounting side of the unit
-L = left side
-R = right side

5. Number of EN2 sensors with NC contact and 2 m cable
- w = 0 – 9 sensors / normally closed / 2 m cable

6. Number of EN2 sensors with NO contact and 2 m cable
- x = 0 – 9 sensors / normally open / 2 m cable

7. **Number of EN2 sensors with NC contact and 10 m cable**
- y = 0 – 9 sensors / normally closed / 10 m cable

8. **Number of EN2 sensors with NO contact and 10 m cable**
- z = 0 – 9 sensors / normally open / 10 m cable

Accessories

Electrical Feedback Devices

ADG Encoder Option Kit

Unit type	Mounting type I	Mounting type II	A	B	øC	D
WH40	•		115	95	58,5	ø60
WH50 / WHZ50	•		120	96	58,5	50 × 50
WH80 / WHZ80	•		139	100	58,5	90 × 90
WH120	•		153	93	58,5	100 × 100
WM40		•	25	95	58,5	–
WM60		•	31	95	58,5	–
WM80		•	40	95	58,5	–
WM120		•	74	95	58,5	–
WM60Z	•		124	94	58,5	60 × 60
WM80Z	•		138	98	58,5	65 × 65
WB40		•	20,8	95	58,5	–
WB60		•	32,5	95	58,5	–
MLSM60D		•	37	95	58,5	–
MLSM80D		•	46	95	58,5	–
MLSH60Z	•		174,5	95	58,5	78 × 59
MLSM80Z	•		214,5	95	58,5	100 × 80

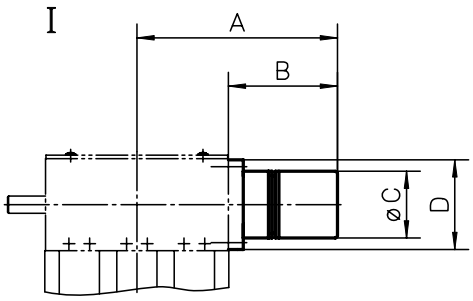

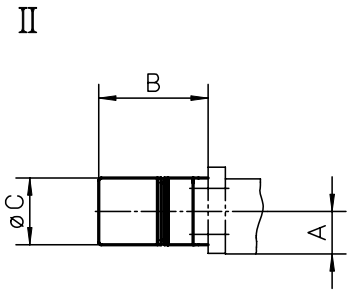

The ADG encoder option kit is an option that is mounted to the unit at the factory. It includes an IG602 encoder, a STE001 encoder connector and an encoder mounting flange with coupling. Cable can also be supplied in 5 or 10 meter lengths.

Accessories

Electrical Feedback Devices

ADG Encoder Option Kit, ordering key

	1	2	3
Example	ADG-08	-05-0600	-00

1. Compatible unit
ADG-01 = WH40
ADG-02 = WH50 / WHZ50
ADG-03 = WH80 / WHZ80
ADG-04 = WH120
ADG-05 = WM40
ADG-06 = WM60 / WV60
ADG-07 = WM80 / WV80
ADG-08 = WM120 / WV120
ADG-09 = WM60Z
ADG-10 = WM80Z
ADG-11 = MLSH60Z
ADG-13 = MLSM80Z
ADG-14 = MLSM60D
ADG-15 = MLSM80D
ADG-16 = WB40
ADG-17 = WB60

2. Supply voltage and number of pulses
-05-0100 = 5 volts, 100 pulses per revolution
-05-0200 = 5 volts, 200 pulses per revolution
-05-0500 = 5 volts, 500 pulses per revolution
-05-0600 = 5 volts, 600 pulses per revolution
-05-1000 = 5 volts, 1000 pulses per revolution
-05-1250 = 5 volts, 1250 pulses per revolution
-05-2000 = 5 volts, 2000 pulses per revolution
-05-2500 = 5 volts, 2500 pulses per revolution
-24-0100 = 10 - 30 volts, 100 pulses per revolution
-24-0200 = 10 - 30 volts, 200 pulses per revolution
-24-0500 = 10 - 30 volts, 500 pulses per revolution
-24-0600 = 10 - 30 volts, 600 pulses per revolution

3. Cable and connector configuration
-00 = no cable only STE001 encoder connector
-05 = 5 m cable with STE001 encoder connector in one of the ends
-10 = 10 m cable with STE001 encoder connector in one of the ends

Accessories

Non-driven Linear Motion Systems

Dimensions	Projection	Online Sizing & Selection!
METRIC		www.LinearMotioneering.com

WH40N

» Ordering key - see page 211
» Technical data - see page 78

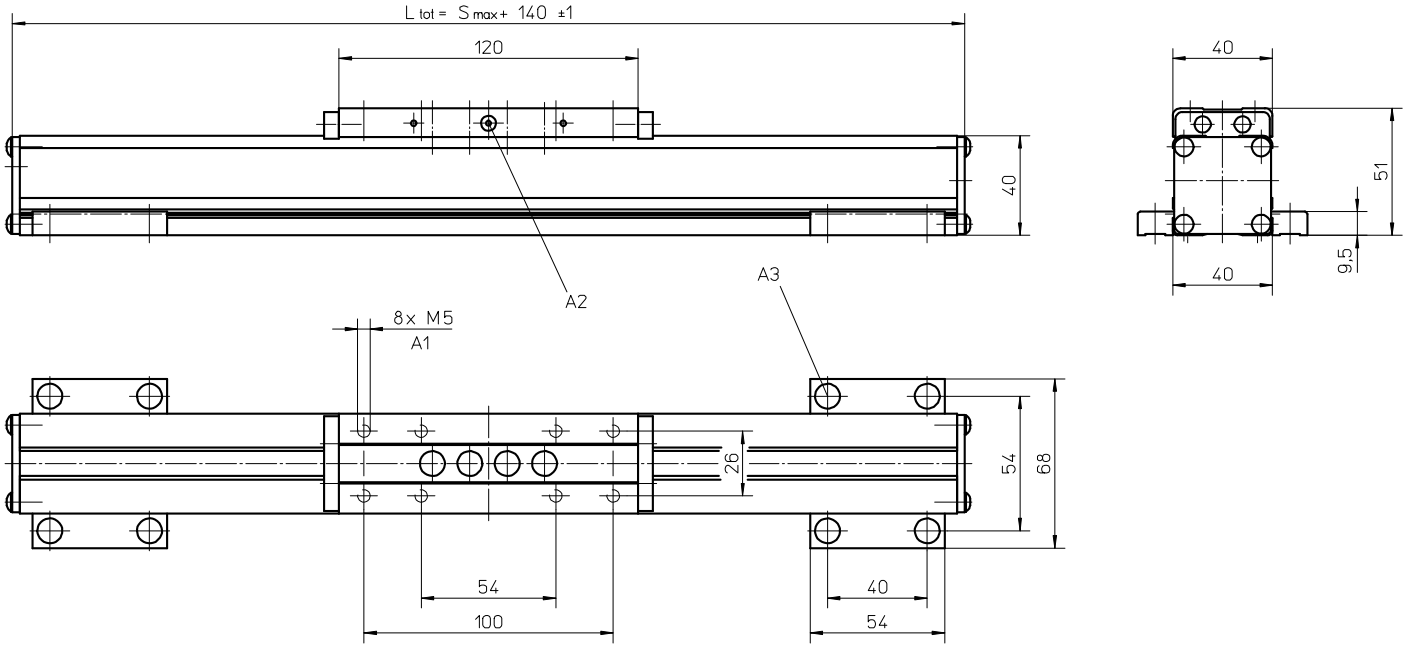

A1: depth 10
A2: lubricating nipple on both sides DIN3405 D 1/A

A3: socket cap screw ISO4762-M5×12 8.8

WH50N

» Ordering key - see page 211
» Technical data - see page 106

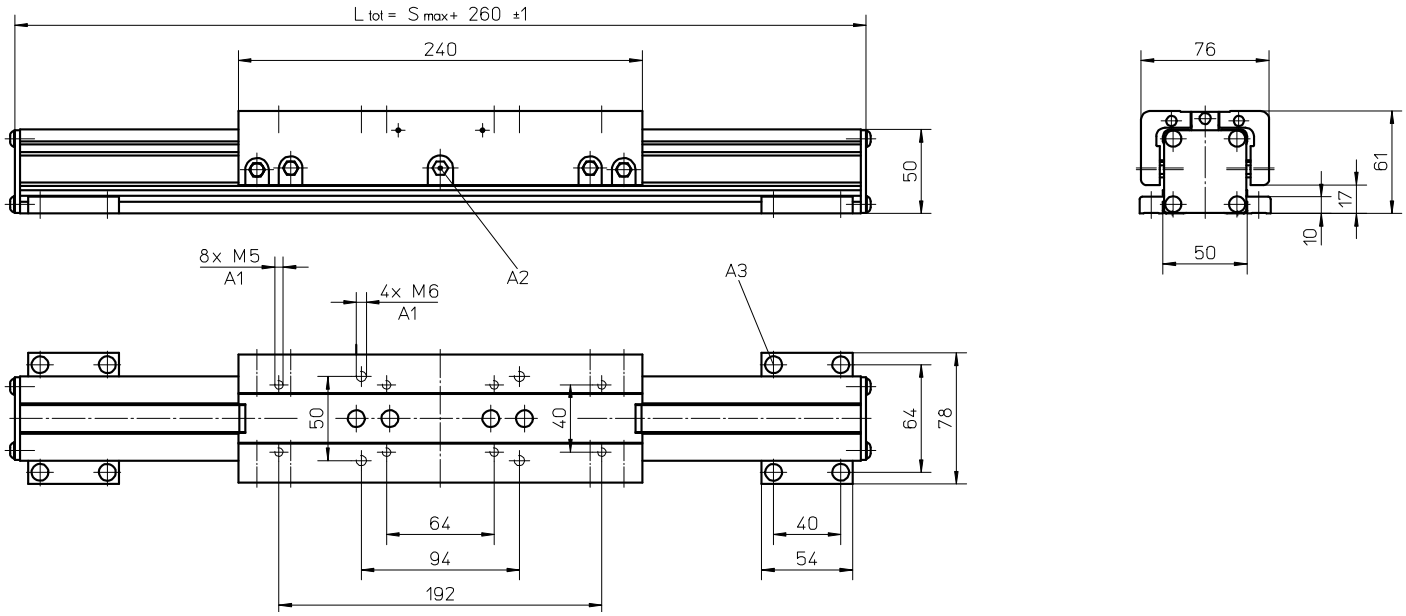

A1: depth 10
A2: funnel type lubricating nipple DIN3405-M6×1-D1

A3: socket cap screw ISO4762-M5×12 8.8

Accessories

Non-driven Linear Motion Systems

Dimensions	Projection	Online Sizing & Selection!
METRIC		www.LinearMotioneering.com

WH80N

» Ordering key - see page 211
» Technical data - see page 108

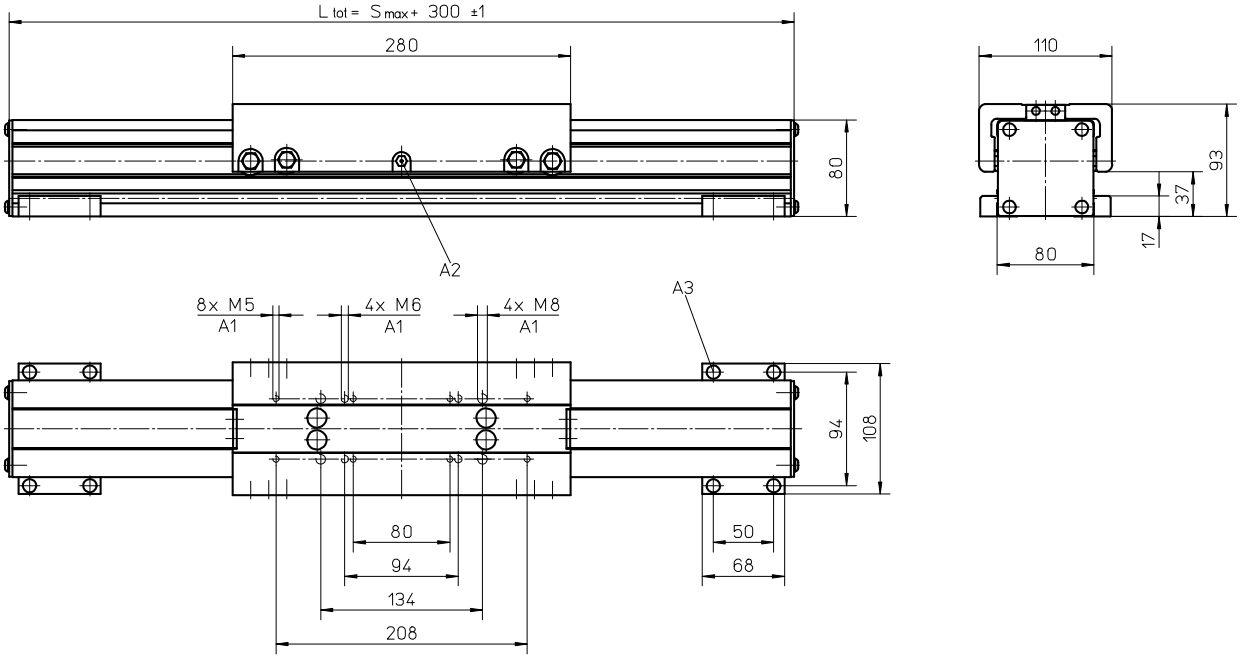

A1: depth 12
A2: funnel type lubricating nipple DIN3405-M6×1-D1
A3: socket cap screw ISO4762-M6×20 8.8

WH120N

» Ordering key - see page 211
» Technical data - see page 110

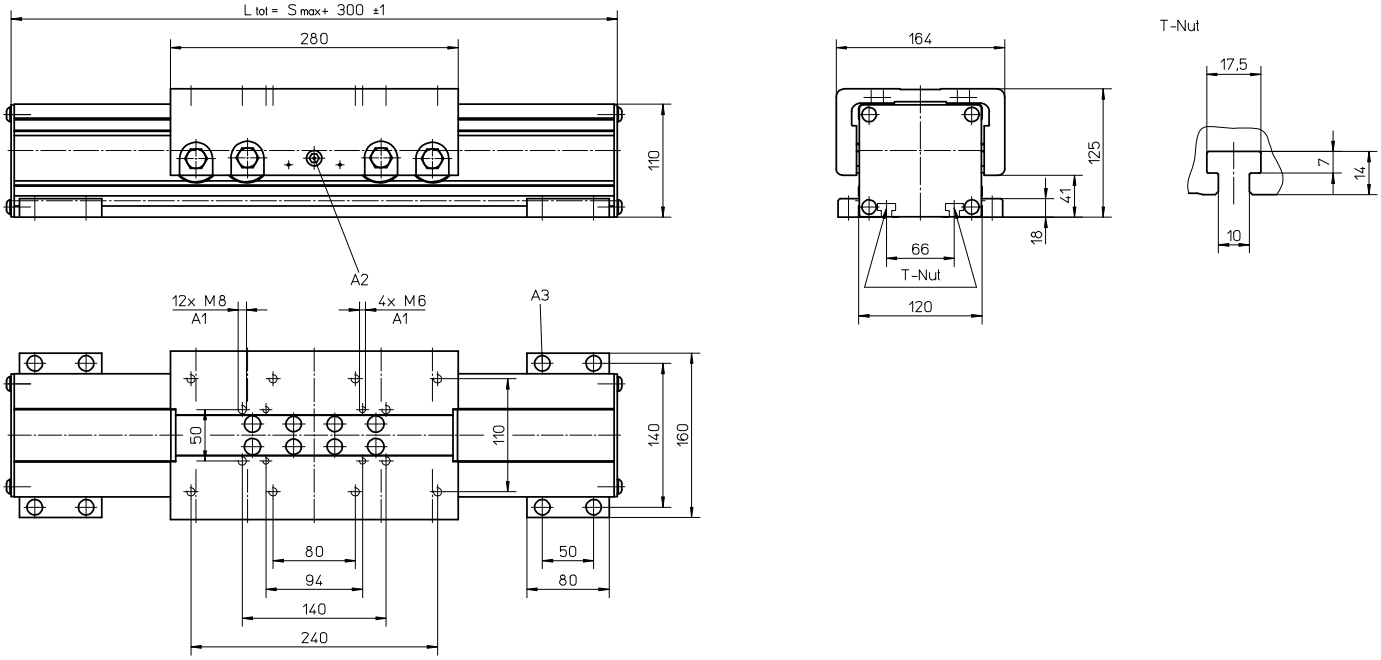

A1: depth 12
A2: funnel type lubricating nipple DIN3405-M6×1-D1
A3: socket cap screw ISO4762-M8×20 8.8

Accessories

Non-driven Linear Motion Systems

Dimensions	Projection	Online Sizing & Selection!
METRIC		www.LinearMotioneering.com

WM40N

» Ordering key - see page 211
» Technical data - see page 14

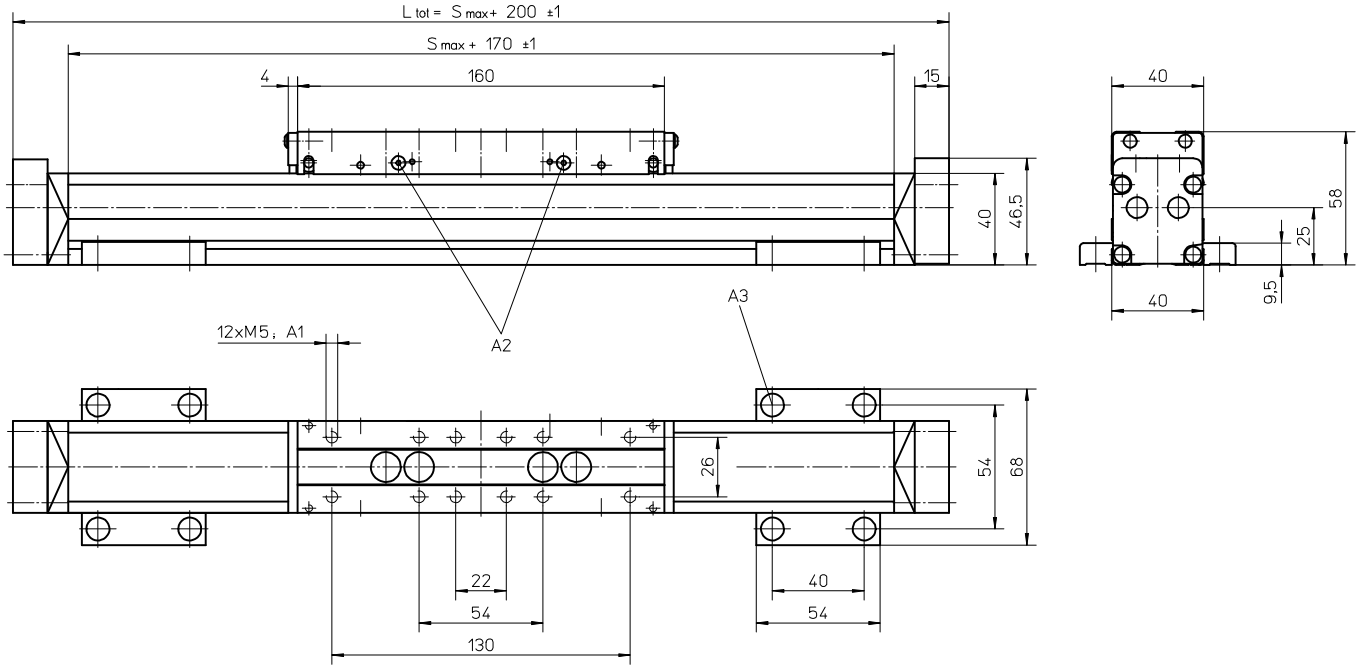

A1: depth 7
A2: lubricating nipple on both sides DIN3405 D 1/A
A3: socket cap screw ISO4762-M5×12 8.8

WM60N

» Ordering key - see page 211
» Technical data - see page 18

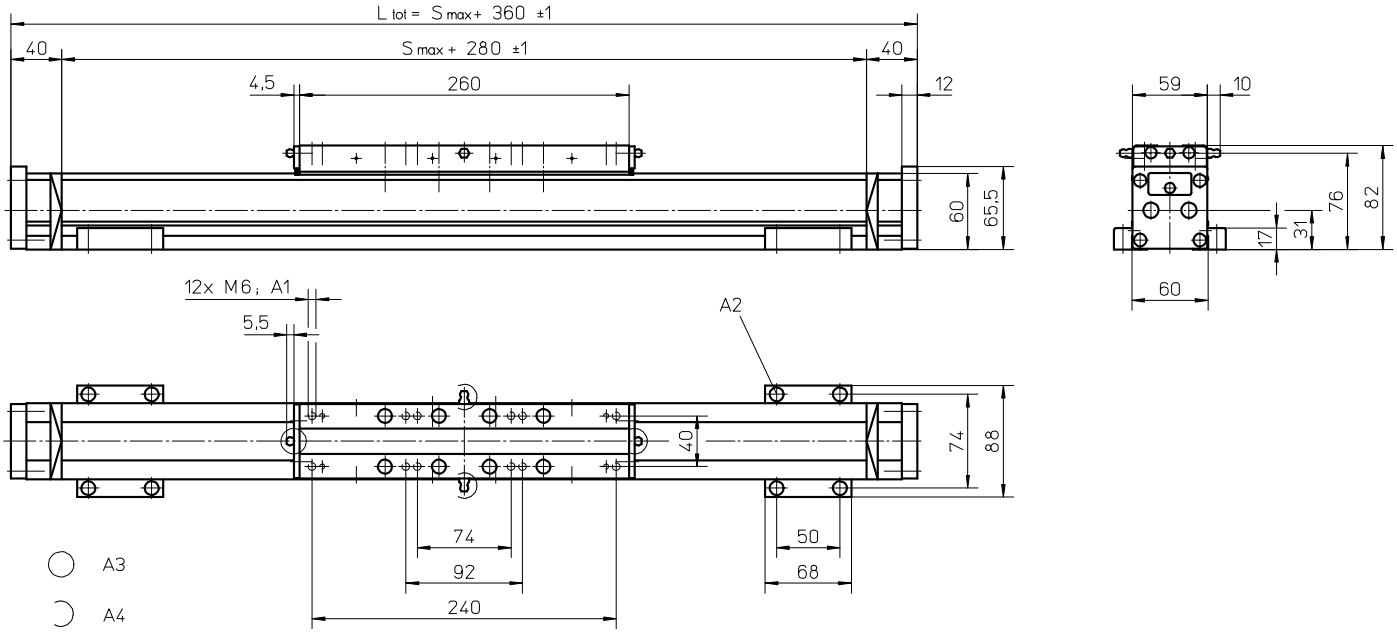

A1: depth 11
A2: socket cap screw ISO4762-M6×20 8.8
A3: tapered lubricating nipple to DIN71412 AM6
A4: can be changed over to one of the three alternative lubricating points by the customer

Accessories

Non-driven Linear Motion Systems

Dimensions	Projection	Online Sizing & Selection!
METRIC		www.LinearMotioneering.com

WM60N with Single Short Carriage

» Ordering key - see page 211
» Technical data - see page 20

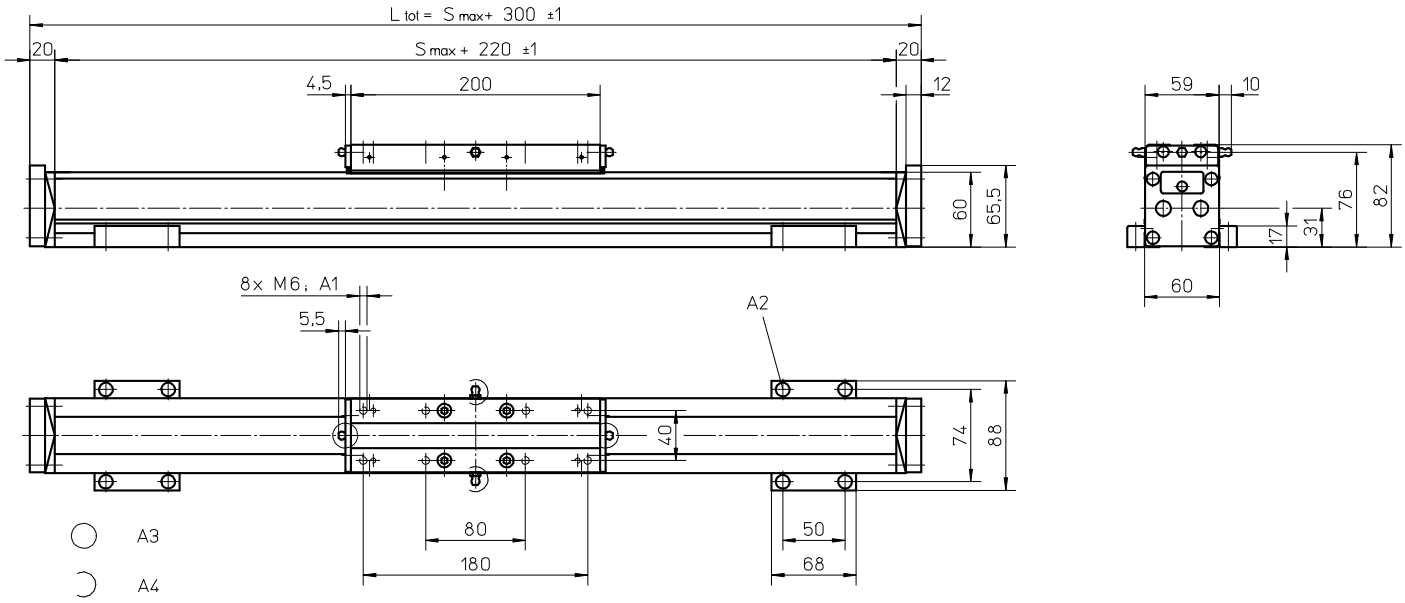

A1: depth 11
A2: socket cap screw ISO4762-M6×20 8.8

A3: tapered lubricating nipple to DIN71412 AM6
A4: can be changed over to one of the three alternative lubricating points by the customer

WM80N

» Ordering key - see page 211
» Technical data - see page 24

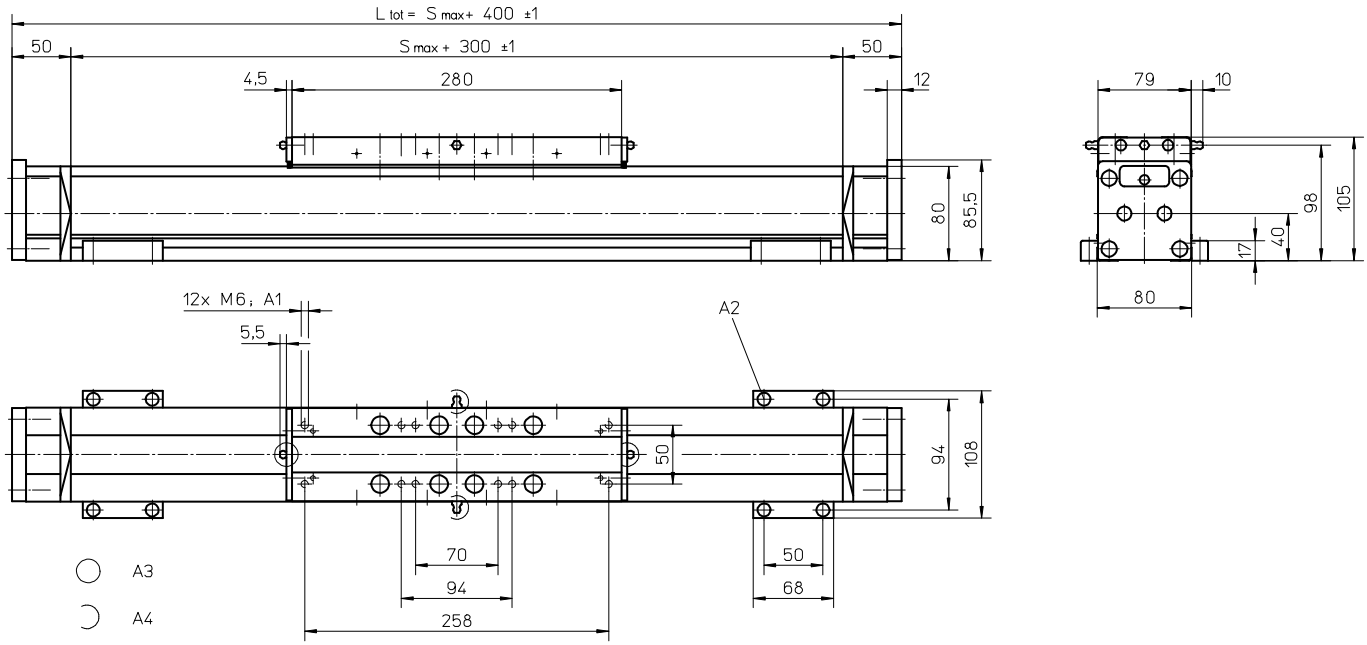

A1: depth 12
A2: socket cap screw ISO4762-M6×20 8.8

A3: tapered lubricating nipple to DIN71412 AM6
A4: can be changed over to one of the three alternative lubricating points by the customer

Accessories

Non-driven Linear Motion Systems

Dimensions	Projection	Online Sizing & Selection!
METRIC		www.LinearMotioneering.com

WM80N with Single Short Carriage

» Ordering key - see page 211
» Technical data - see page 26

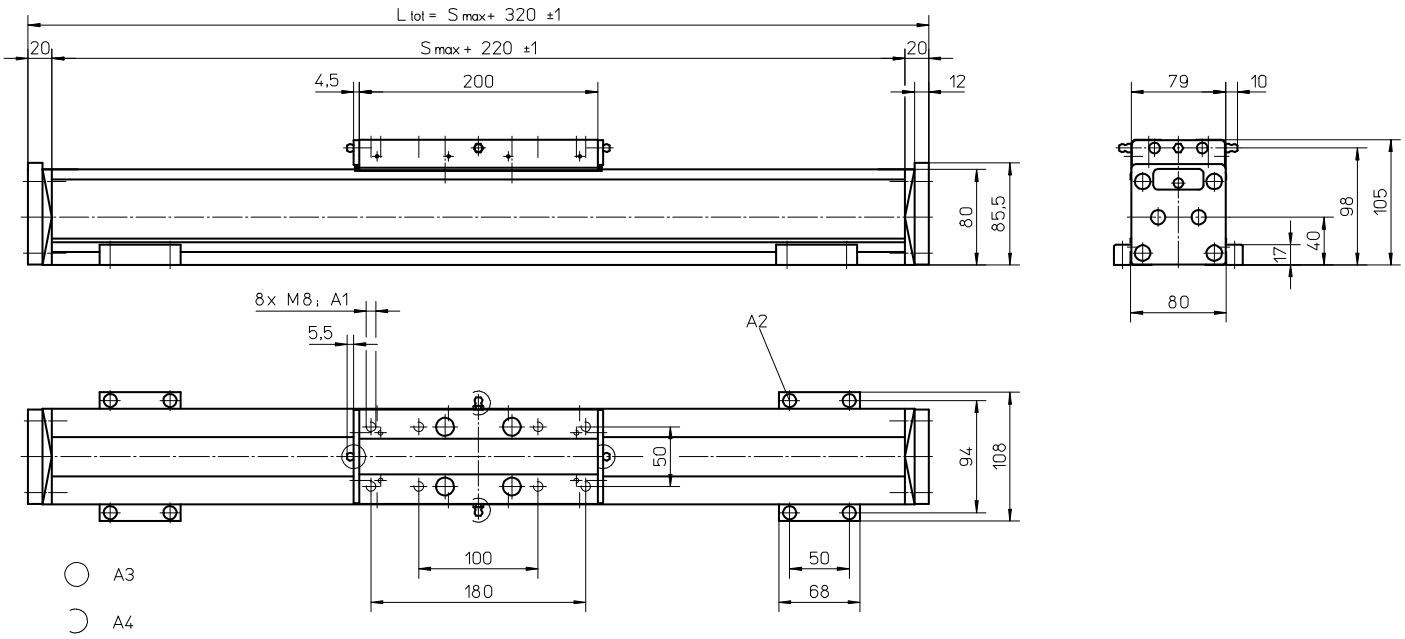

A1: depth 12
A2: socket cap screw ISO4762-M6×20 8.8

A3: tapered lubricating nipple to DIN71412 AM6
A4: can be changed over to one of the three alternative lubricating points by the customer

WM120N

» Ordering key - see page 211
» Technical data - see page 34

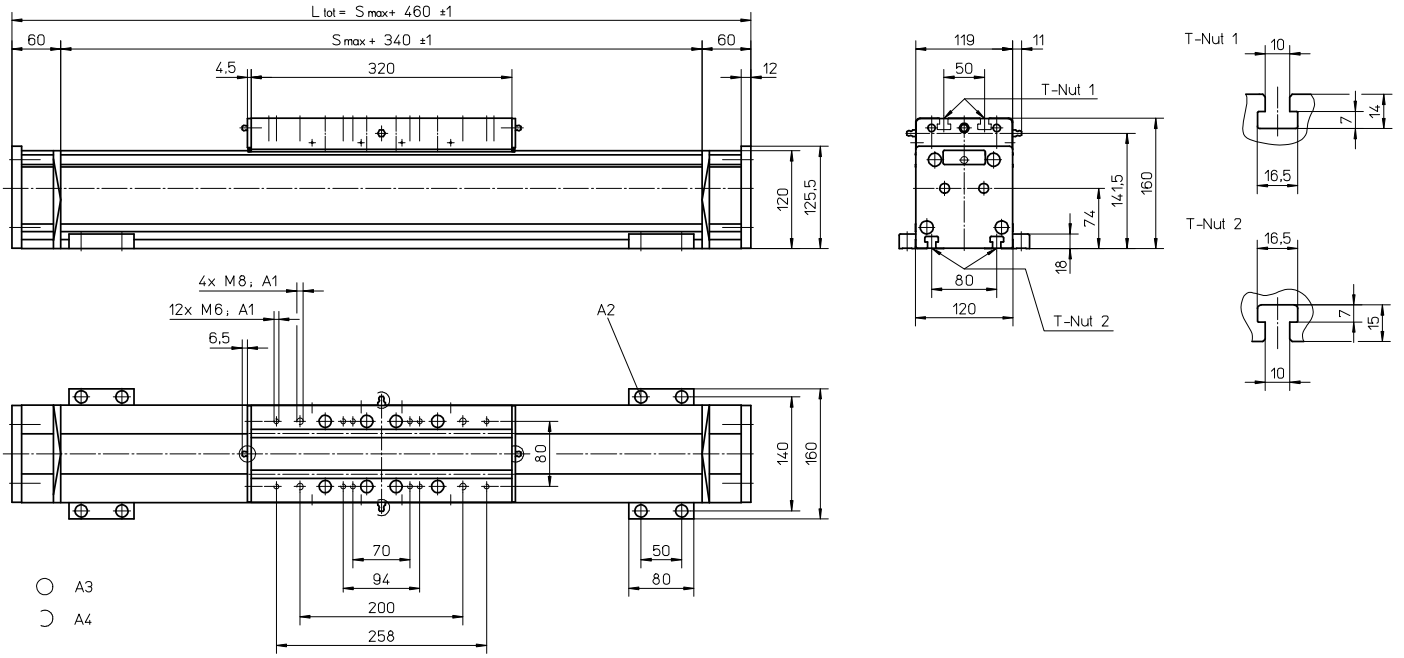

A1: depth 22
A2: socket cap screw ISO4762-M8×20 8.8

A3: tapered lubricating nipple to DIN71412 M8×1
A4: can be changed over to one of the three alternative lubricating points by the customer

Accessories

Non-driven Linear Motion Systems

Dimensions	Projection	Online Sizing & Selection!
METRIC		www.LinearMotioneering.com

M75N

» Ordering key - see page 212
» Technical data - see page 42

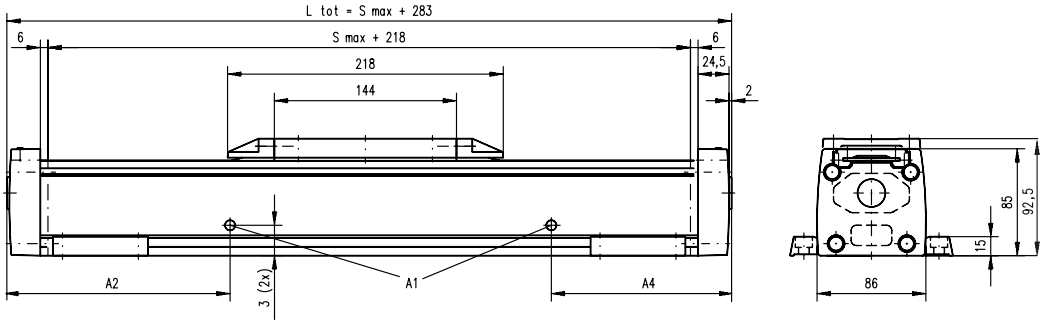

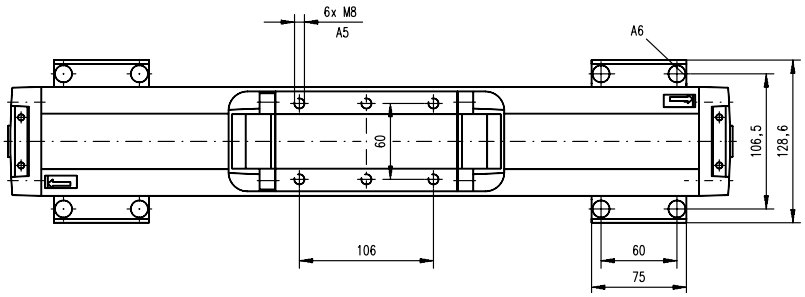

A1: slide guide tensioning holes ø6 (MG07N), lubrication holes ø10 (MF07N)
A2: 177 (MG07N), 127 (MF07N)
A3: 24 (MG07N), 43 (MF07N)
A4: 326 (MG07N), 346 (MF07N)
A5: depth 8 Heli coil
A6: ø13,5 / ø 8,5 for socket head cap screw M8

M100N

» Ordering key - see page 212
» Technical data - see page 44

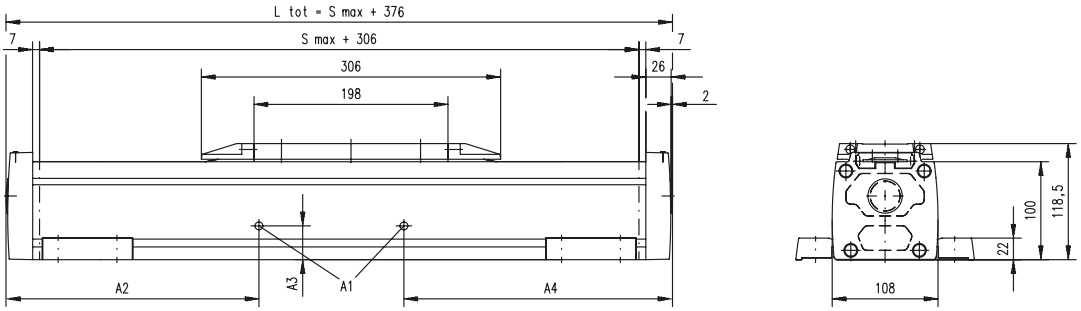

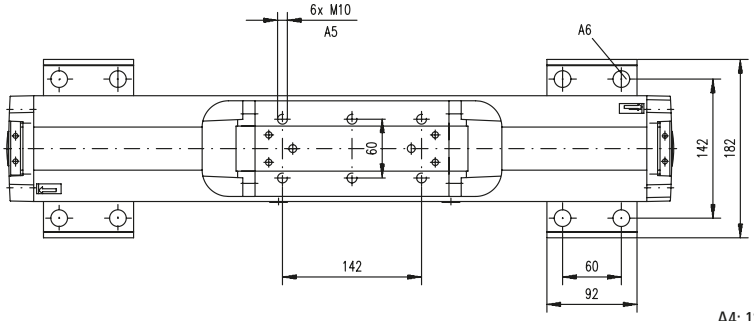

A1: slide guide tensioning holes ø6 (MG10N), ø10 (MF10N)
A2: 127,5 if Ltot <=1055mm,
227,5 if Ltot > 1055mm (MG10N), 292,5 (MF10N)
A3: 34,5 (MG10N), 56,5 (MF10N)
A4: 127,5 if Ltot <= 1055mm, 377,5 if Ltot > 1055mm (MG10N),
292,5 if Ltot => 755mm, no hole if Ltot < 755mm (MF10N)
A5: depth 10 Heli coil
A6: ø17 / ø 10,5 for socket head cap screw M10

Accessories

Non-RediMount Linear Motion Systems

Dimensions	Projection	Online Sizing & Selection!
METRIC		www.LinearMotioneering.com

WM40

» Ordering key - see page 193
» Technical data - see page 4 - 17

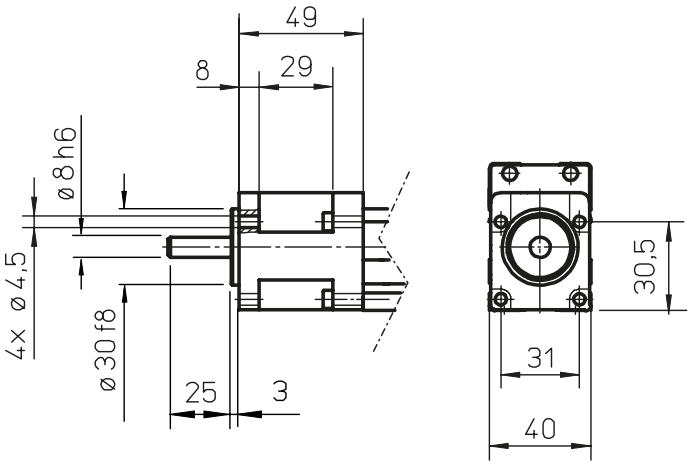

WM60, WV60

» Ordering key - see page 193, 194
» Technical data - see page 18 - 23, 30

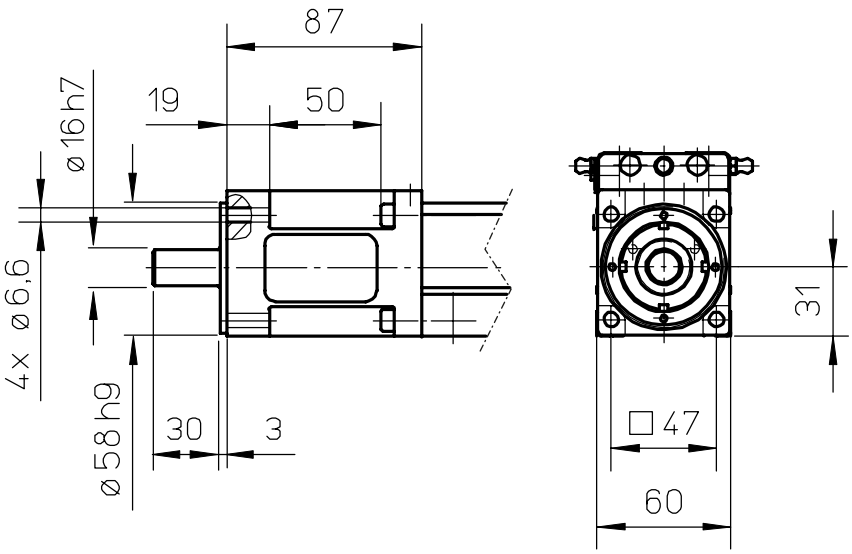

Accessories

Non-RediMount Linear Motion Systems

Dimensions	Projection	Online Sizing & Selection!
METRIC		www.LinearMotioneering.com

WM80, WV80

» Ordering key - see page 193, 194
» Technical data - see page 24 - 27, 32

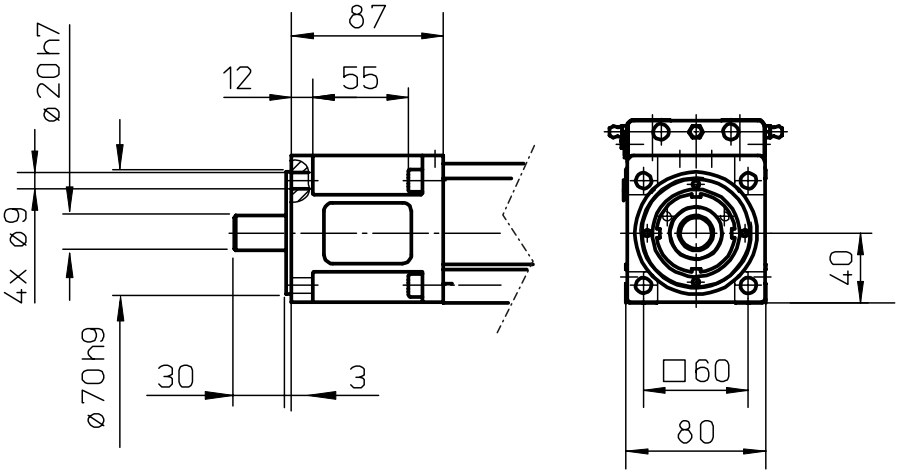

WM120, WV120

» Ordering key - see page 193. 194
» Technical data - see page 28, 32

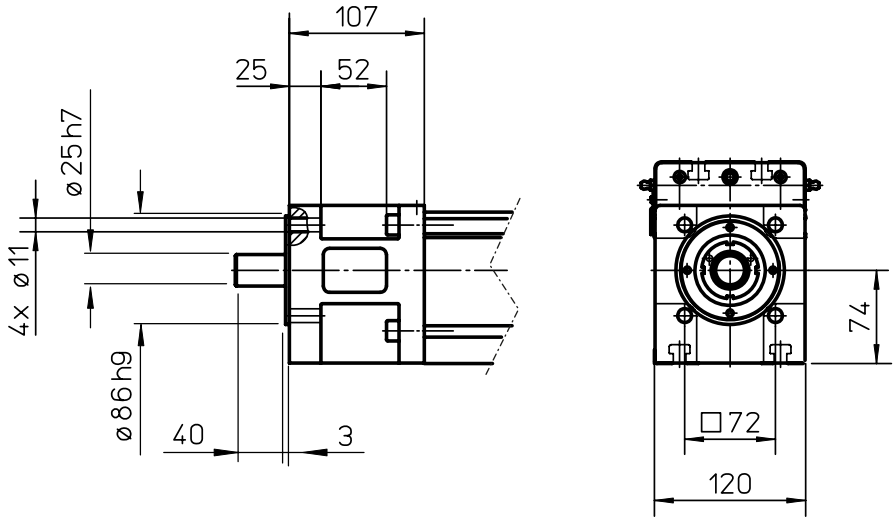

Accessories

Non-RediMount Linear Motion Systems

Dimensions	Projection	Online Sizing & Selection!
METRIC		www.LinearMotioneering.com

MLSM60D

» Ordering key - see page 195
» Technical data - see page 36

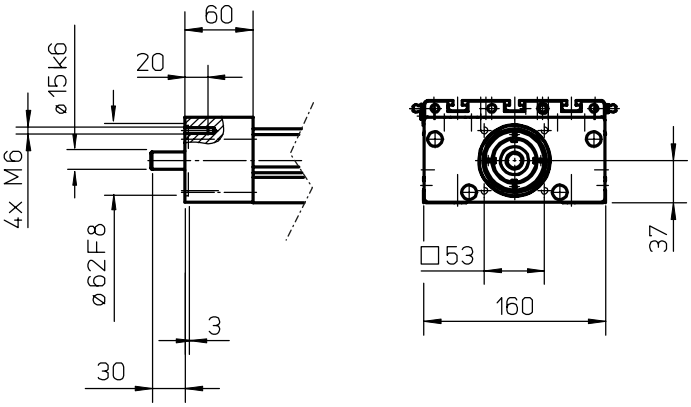

MLSM80D

» Ordering key - see page 195
» Technical data - see page 38

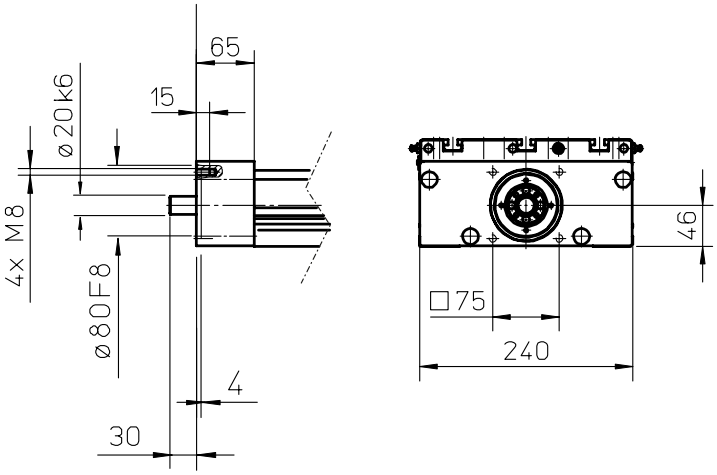

Accessories

Non-RediMount Linear Motion Systems

Dimensions	Projection	Online Sizing & Selection!
METRIC		www.LinearMotioneering.com

M55 with ball screw drive

» Ordering key - see page 196, 201
» Technical data - see page 40, 70

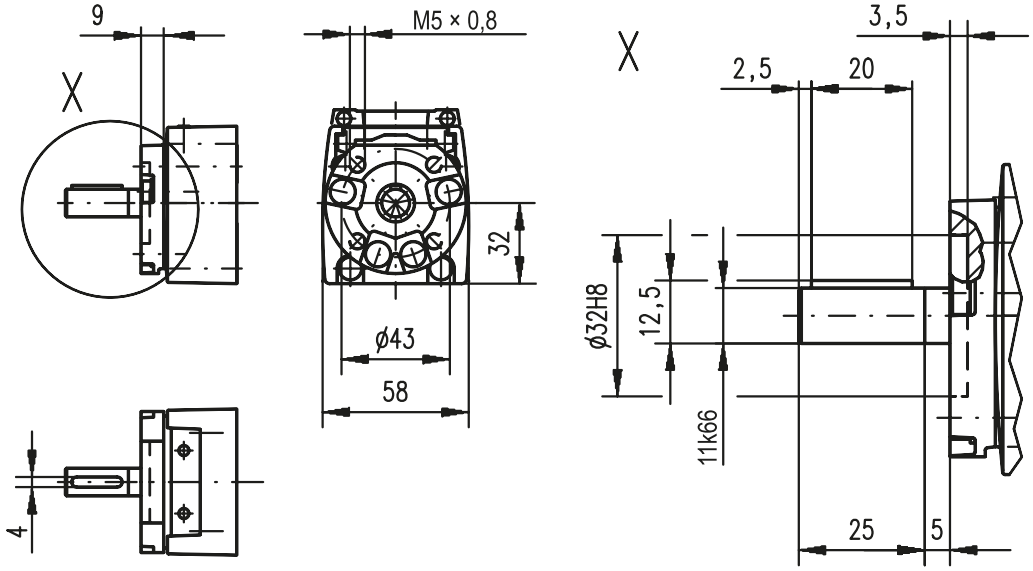

M75 with ball screw drive

» Ordering key - see page 196, 201
» Technical data - see page 42, 72

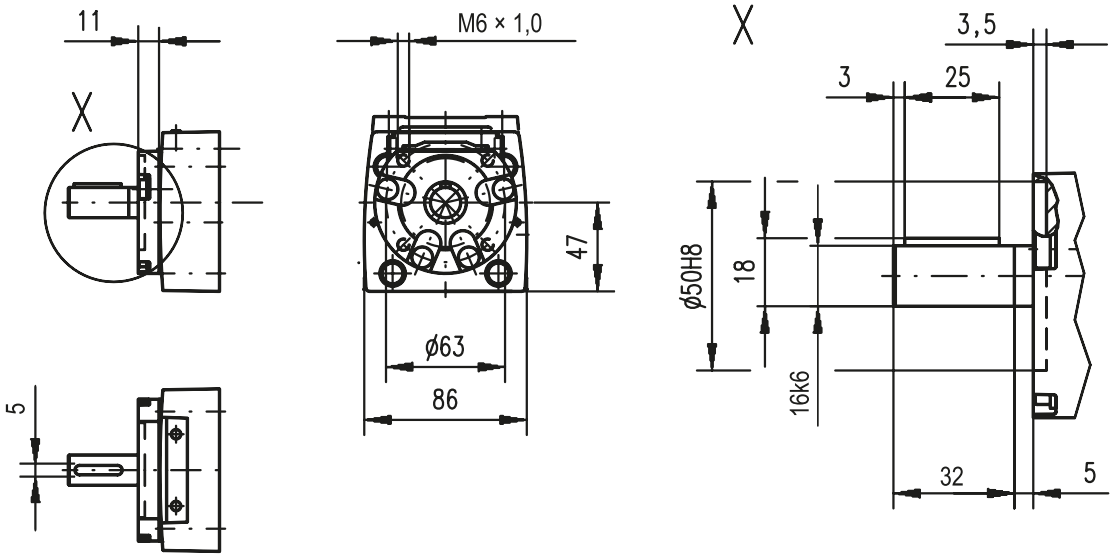

Accessories

Non-RediMount Linear Motion Systems

Dimensions	Projection	Online Sizing & Selection!
METRIC		www.LinearMotioneering.com

M100 with ball screw drive

» Ordering key - see page 196, 201
» Technical data - see page 44, 74

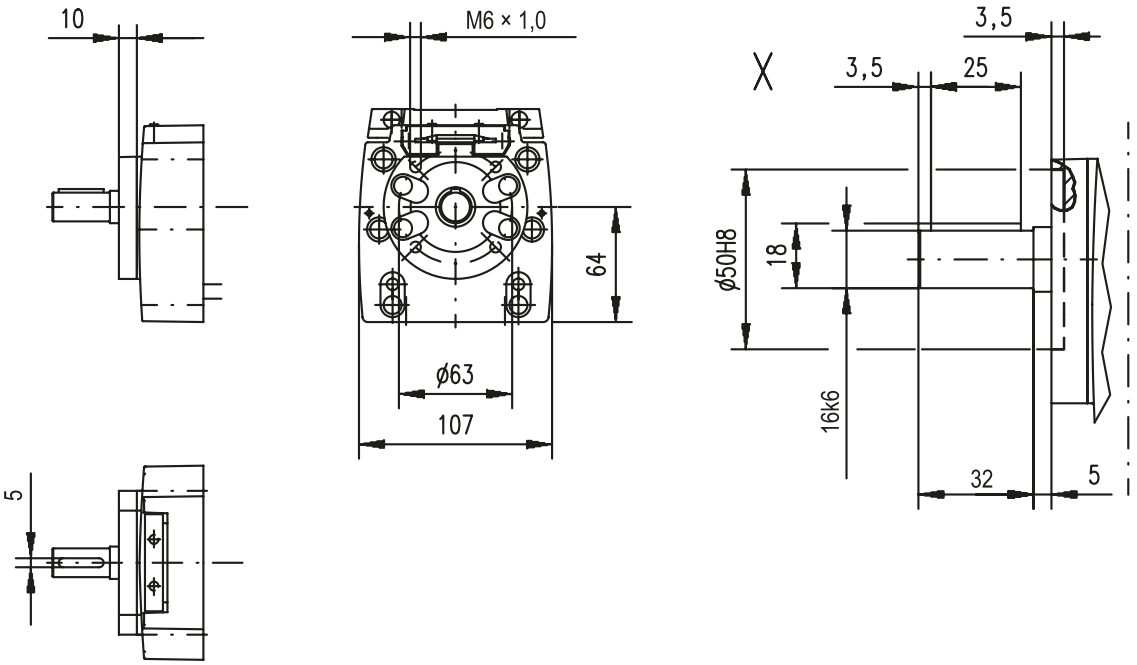

WH40

» Ordering key - see page 202
» Technical data - see page 78

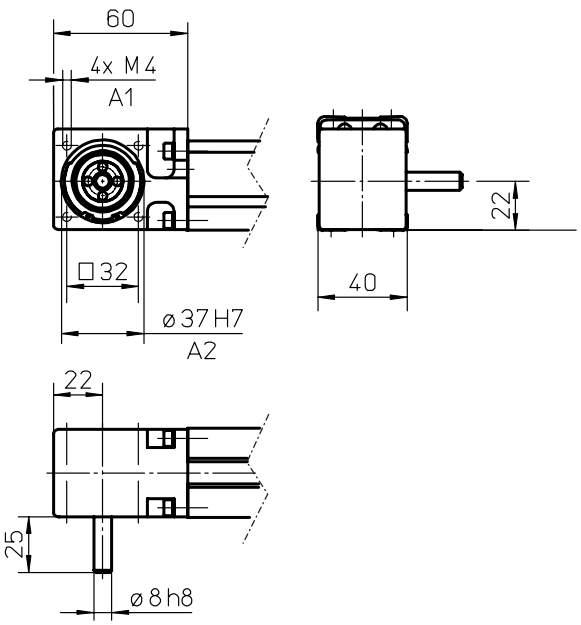

A1: depth 10
A2: depth 3

Accessories

Non-RediMount Linear Motion Systems

Dimensions	Projection	Online Sizing & Selection!
METRIC		www.LinearMotioneering.com

WM60Z

» Ordering key - see page 203
» Technical data - see page 80

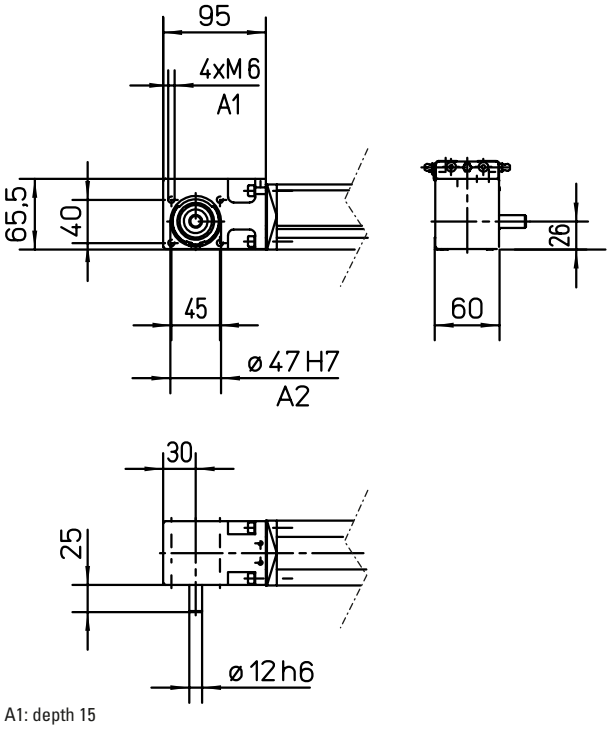

A1: depth 15
A2: depth 4

WM80Z

» Ordering key - see page 203
» Technical data - see page 82

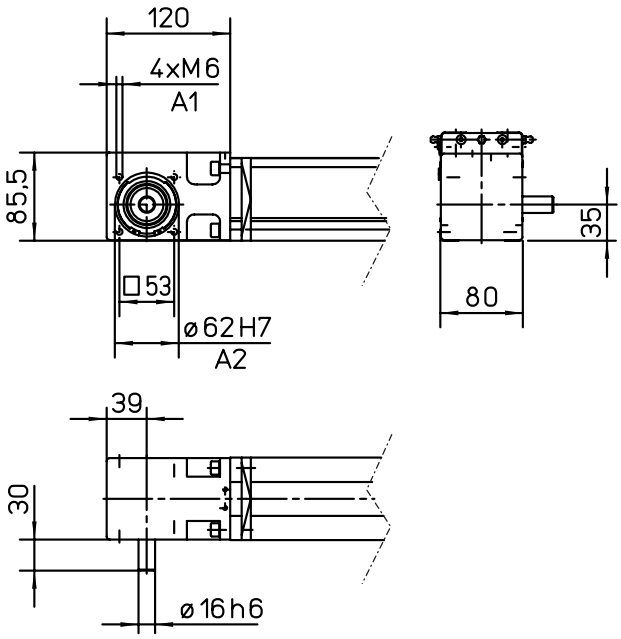

A1: depth 15
A2: depth 2,5

Accessories

Non-RediMount Linear Motion Systems

Dimensions	Projection	Online Sizing & Selection!
METRIC		www.LinearMotioneering.com

M55 with belt drive

» Ordering key - see page 204, 206
» Technical data - see page 86, 98

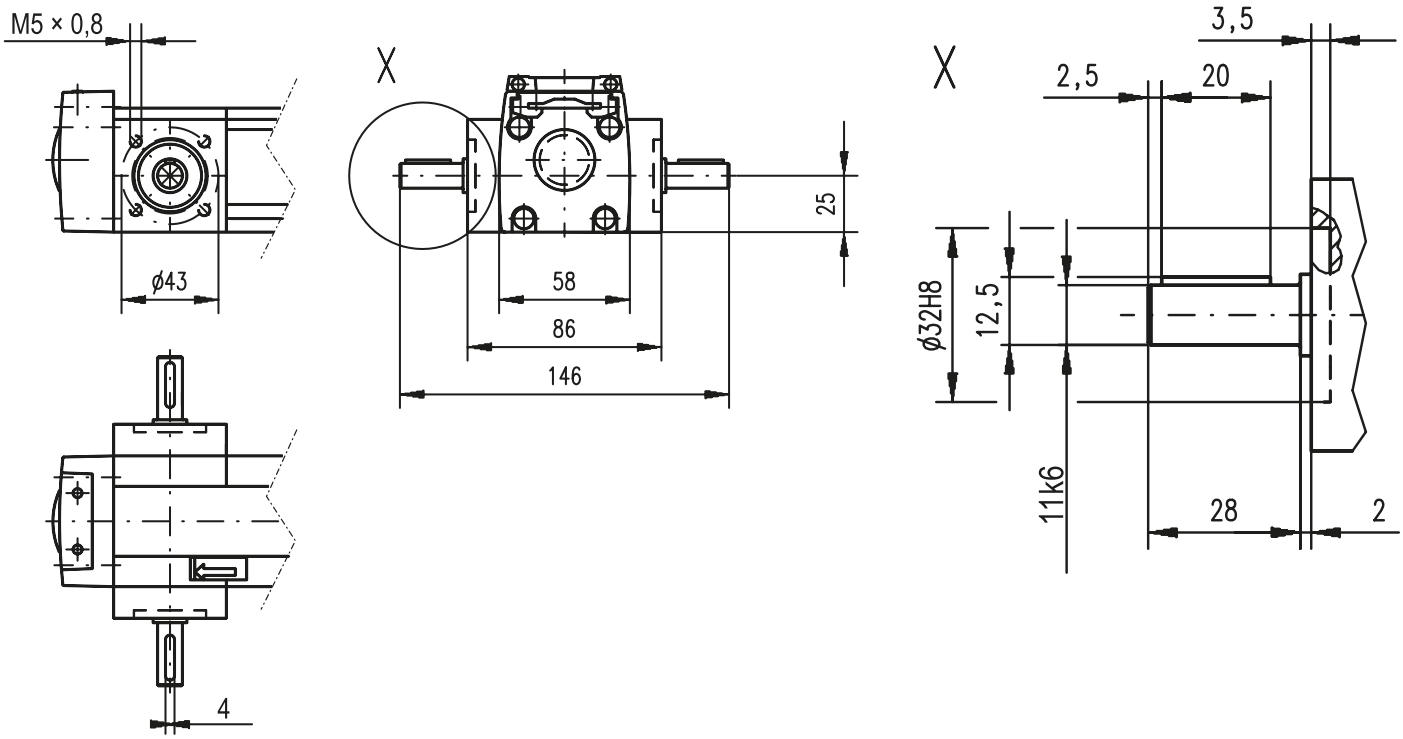

M75 with belt drive

» Ordering key - see page 204, 206
» Technical data - see page 88, 100

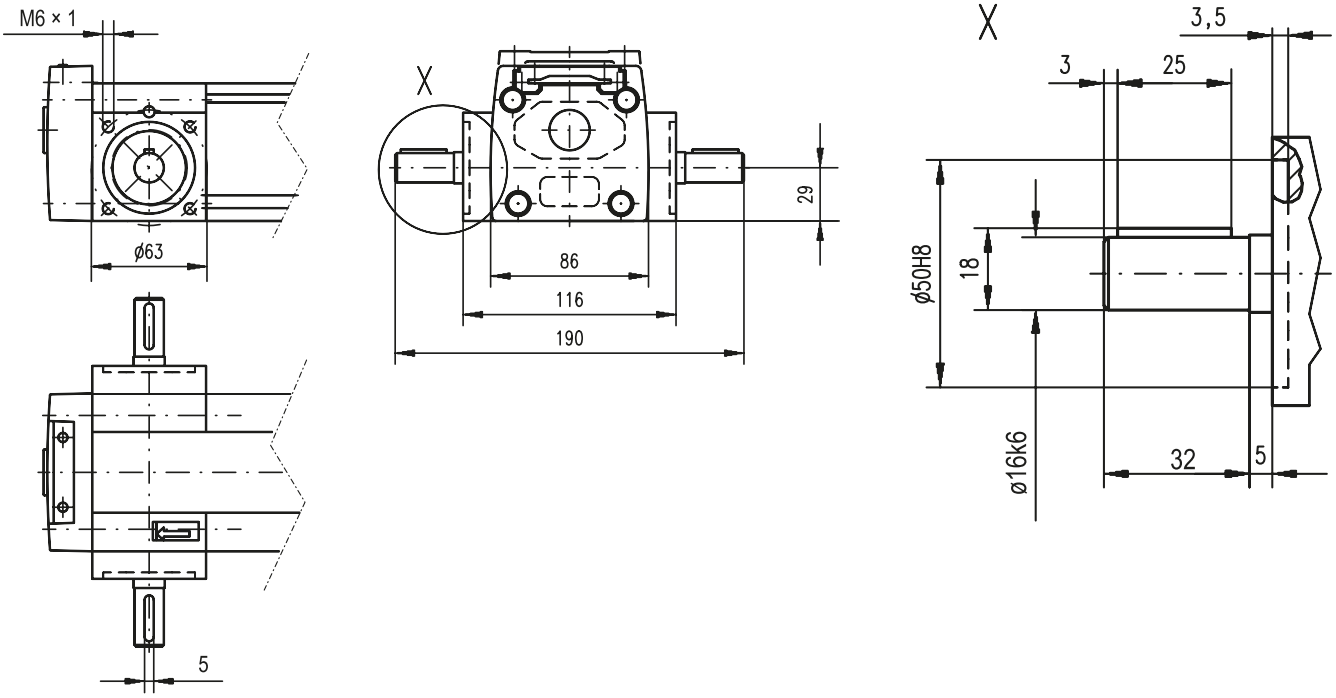

Accessories

Non-RediMount Linear Motion Systems

Dimensions	Projection	Online Sizing & Selection!
METRIC		www.LinearMotioneering.com

M100 with belt drive

» Ordering key - see page 204, 206
» Technical data - see page 90, 102

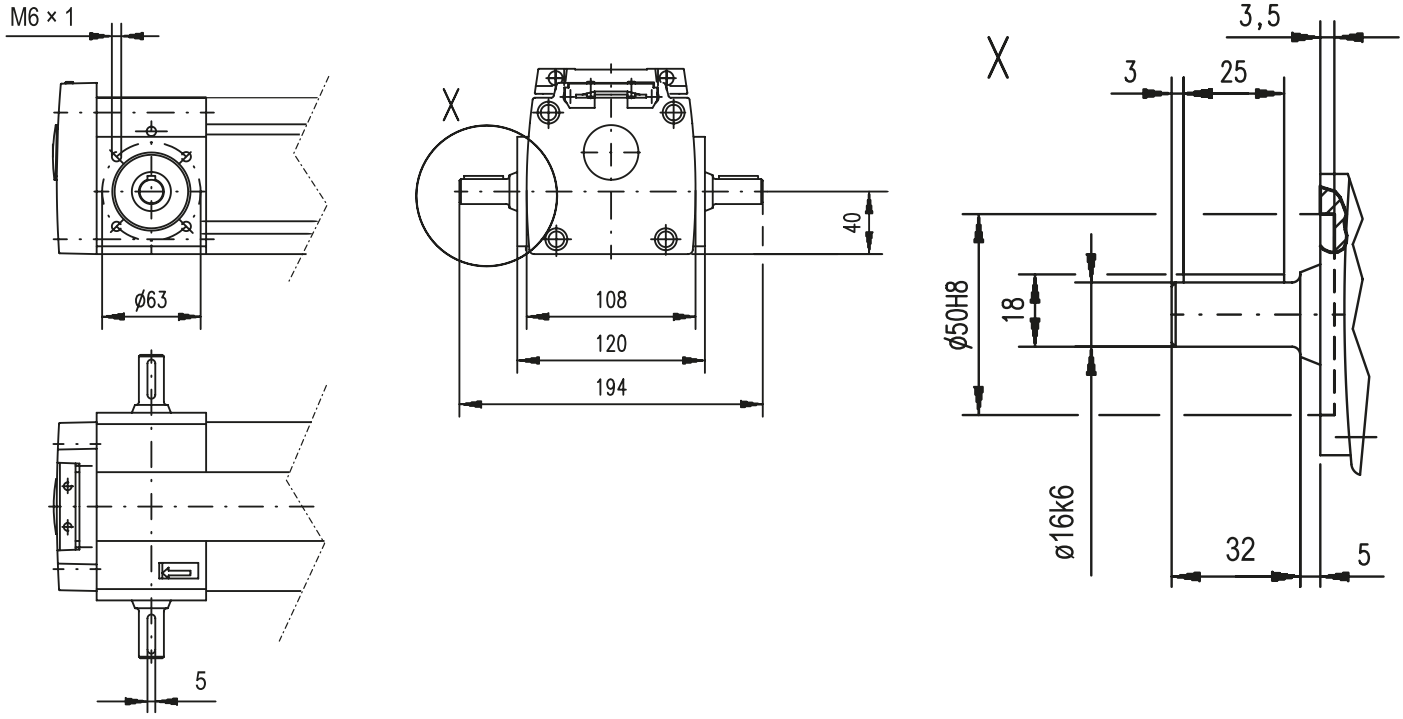

MLSM80Z

» Ordering key - see page 205
» Technical data - see page 92

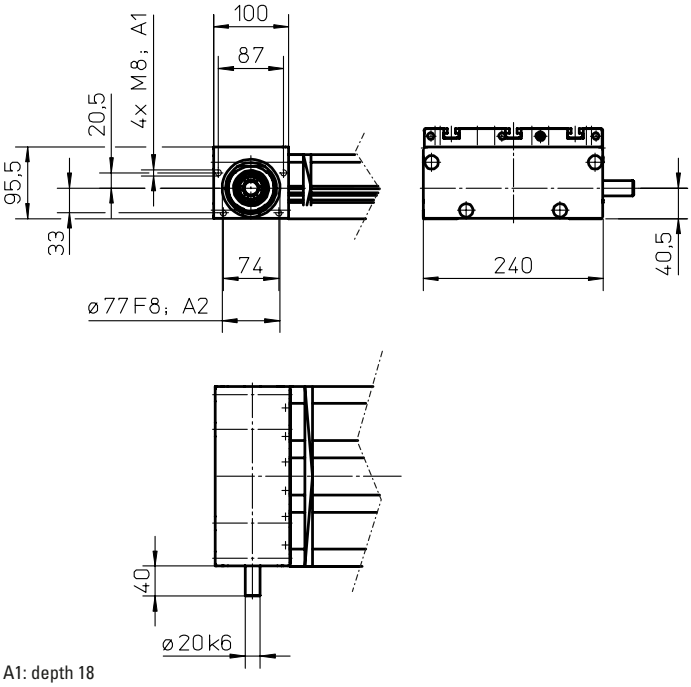

A1: depth 18
A2: depth 4

Accessories

Non-RediMount Linear Motion Systems

Dimensions	Projection	Online Sizing & Selection!
METRIC		www.LinearMotioneering.com

M50

» Ordering key - see page 206
» Technical data - see page 96

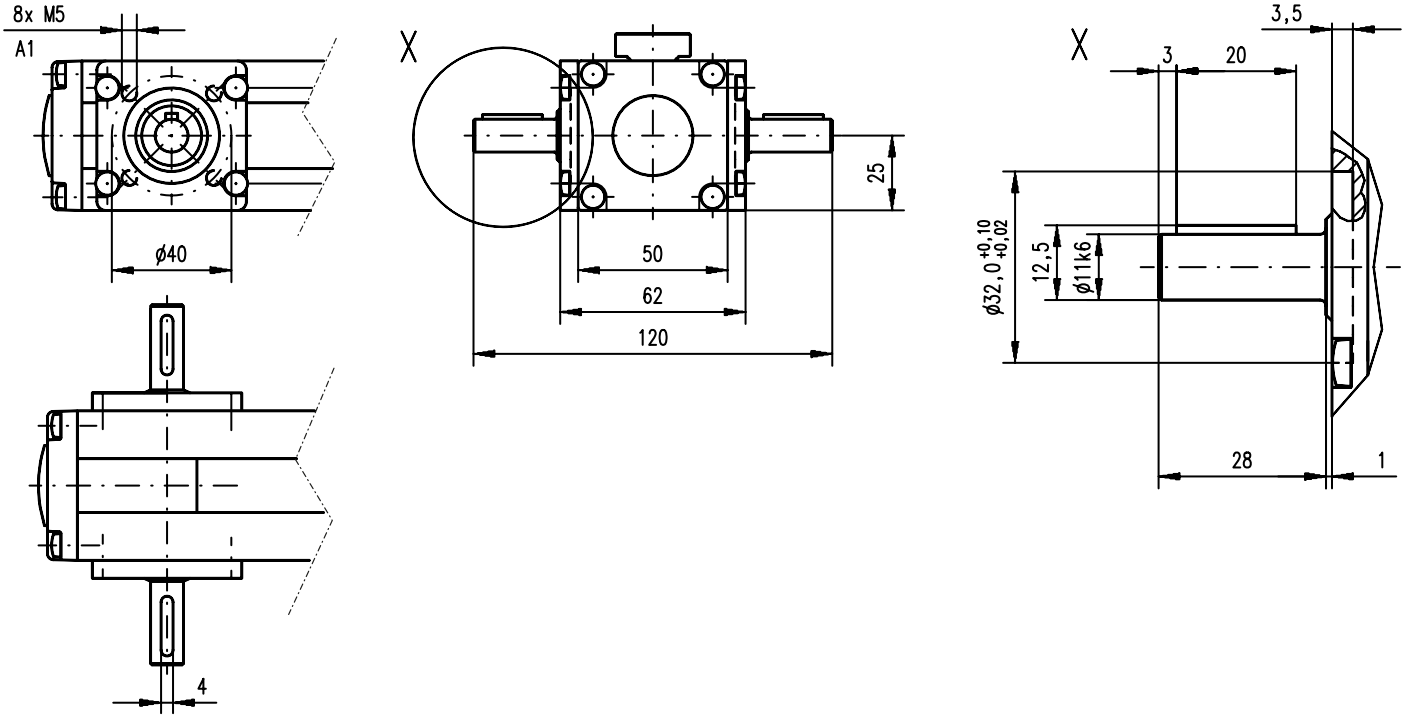

A1: depth 8,5

WH50

» Ordering key - see page 207
» Technical data - see page 106

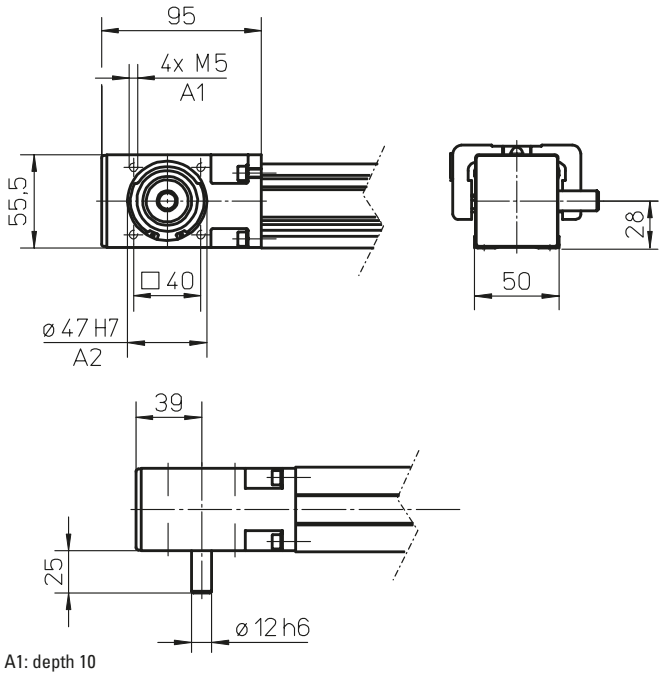

A1: depth 10
A2: depth 3

Accessories

Non-RediMount Linear Motion Systems

Dimensions	Projection	Online Sizing & Selection!
METRIC		www.LinearMotioneering.com

WH80

» Ordering key - see page 207
» Technical data - see page 108

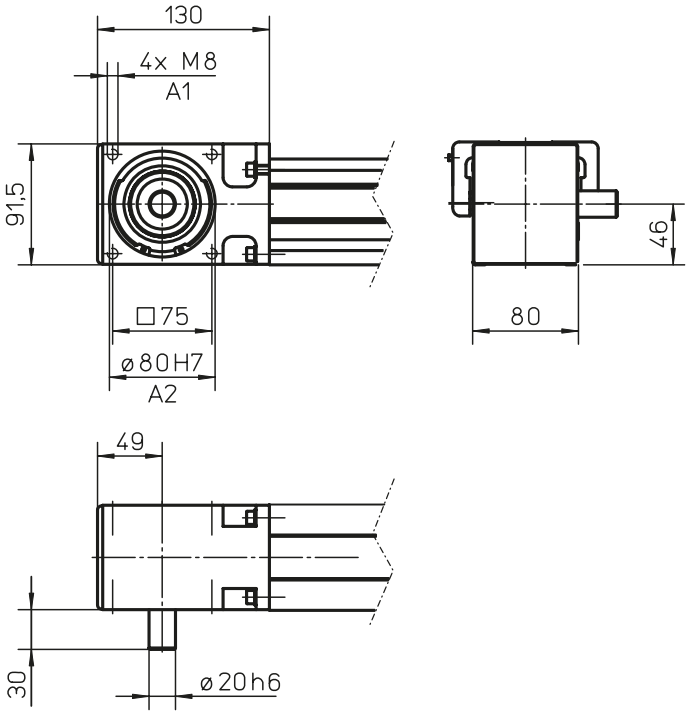

A1: depth 16
A2: depth 2,5

WH120

» Ordering key - see page 207
» Technical data - see page 110

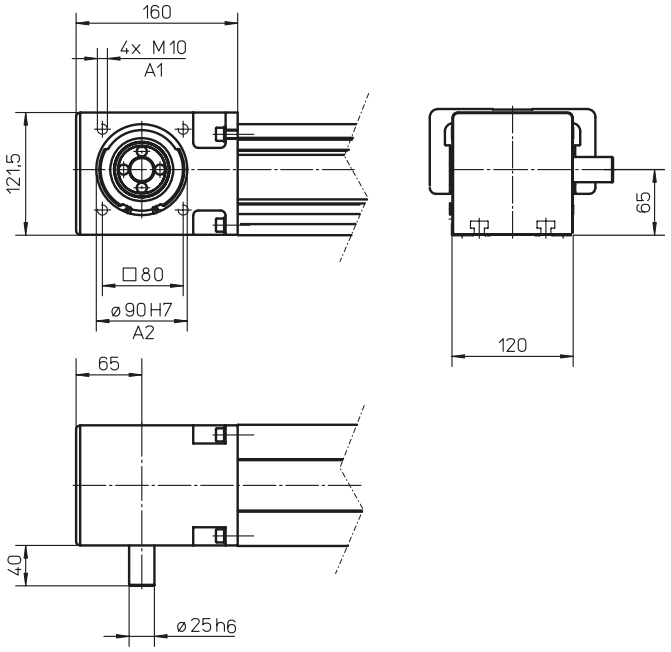

A1: depth 20
A2: depth 7

Accessories

Non-RediMount Linear Motion Systems

Dimensions	Projection	Online Sizing & Selection!
METRIC		www.LinearMotioneering.com

MLSH60Z

» Ordering key - see page 208
» Technical data - see page 112

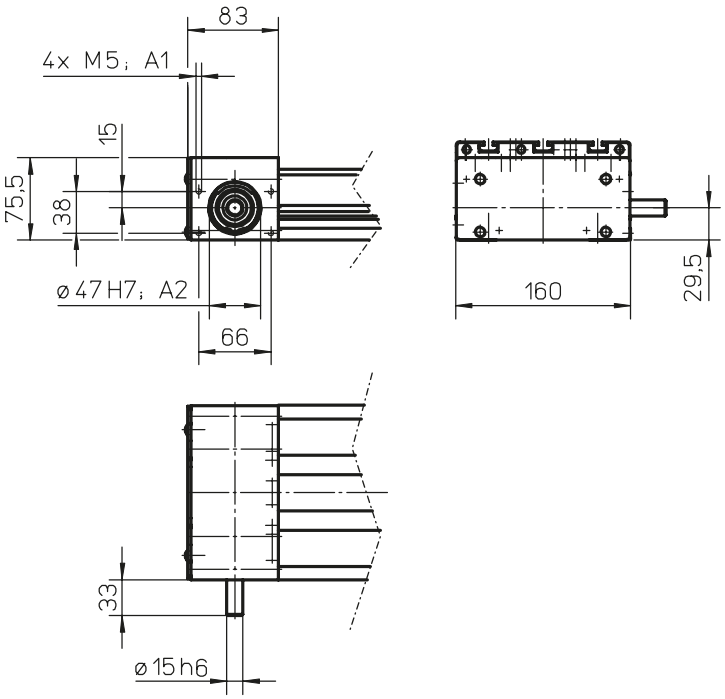

A1: depth 10
A2: depth 4

WHZ50

» Ordering key - see page 209
» Technical data - see page 116

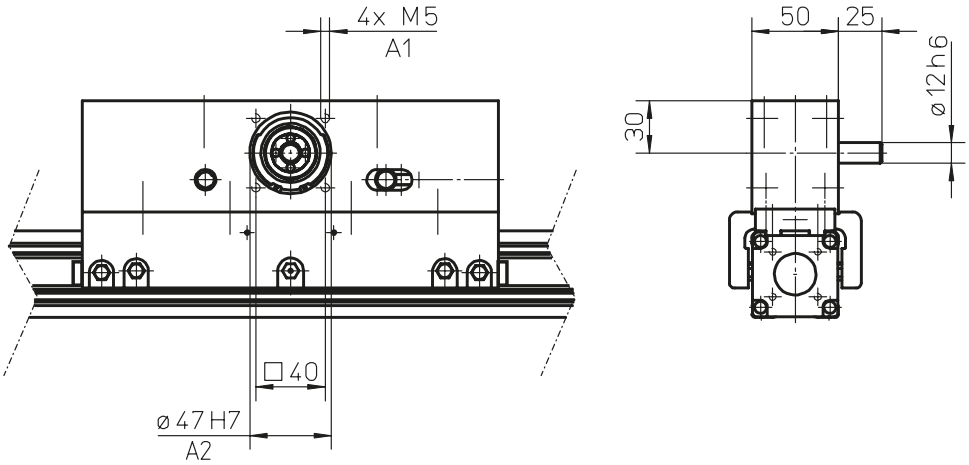

A1: depth 12
A2: depth 3,5

Accessories

Non-RediMount Linear Motion Systems

Dimensions	Projection	Online Sizing & Selection!
METRIC		www.LinearMotioneering.com

WHZ80

» Ordering key - see page 209
» Technical data - see page 118

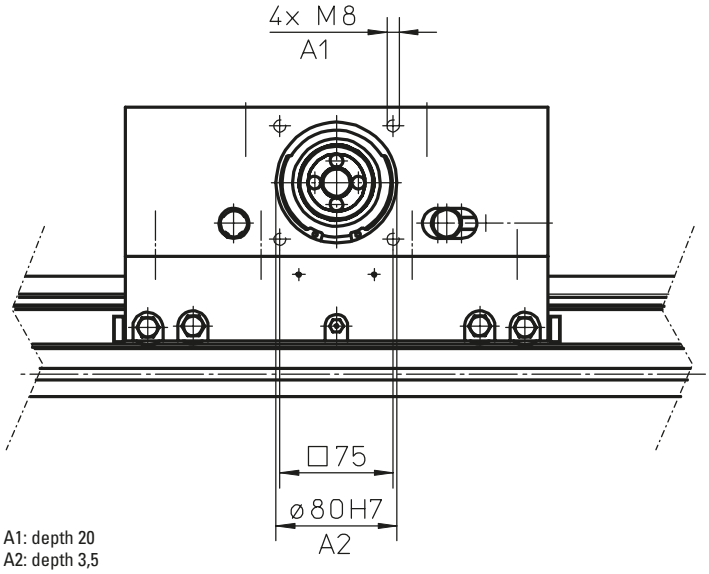

A1: depth 20
A2: depth 3,5

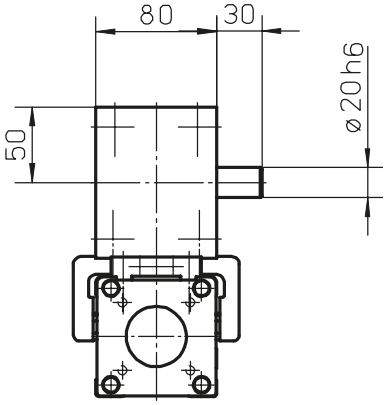

Additional Technical Data

Linear Motion Systems with Lead or Ball Screw Drive and Ball Guides

Technical Data

Parameter		WM40S	WM40D	WM60D	WM60S	WM60X	WM80D	WM80S	WM120D
Geometrical moment of inertia of the profile (Iy)	[mm^4]	$10,8 \times 10^4$	$10,8 \times 10^4$	$5,8 \times 10^5$	$5,8 \times 10^5$	$5,8 \times 10^5$	$1,85 \times 10^6$	$1,85 \times 10^6$	$7,7 \times 10^6$
Geometrical moment of inertia of the profile (Iz)	[mm^4]	$13,4 \times 10^4$	$13,4 \times 10^4$	$5,9 \times 10^5$	$5,9 \times 10^5$	$5,9 \times 10^5$	$1,94 \times 10^6$	$1,94 \times 10^6$	$9,4 \times 10^6$
Friction factor of the guide system (μ)		0,05	0,05	0,1	0,1	0,1	0,1	0,1	0,1
Efficiency of the unit		0,8	0,8	0,8	0,8	0,8	0,8	0,8	0,8
Bending factor (b)		0,0003	0,0003	0,0003	0,0003	0,0003	0,0003	0,0003	0,0003
Inertia of ball screw (jsp)	[kgm^2/m]	$1,13 \times 10^{-5}$	$1,13 \times 10^{-5}$	$8,46 \times 10^{-5}$	$8,46 \times 10^{-5}$	$8,46 \times 10^{-5}$	$2,25 \times 10^{-4}$	$2,25 \times 10^{-4}$	$6,34 \times 10^{-4}$
Dynamic load rating of ball screw (Cx)	[N]								
05 mm lead		4400	4400	10500	10500	10500	12300	12300	21500
10 mm lead		-	-	-	-	-	13200	13200	33400
20 mm lead		-	-	11600	11600	-	13000	13000	29700
40 mm lead		-	-	-	-	-	-	-	14900
50 mm lead		-	-	8400	8400	-	15400	15400	-
Dynamic load rating of ball guide (Cy)	[N]	2 × 2650	2 × 2650	4 × 11495	2 × 12964	4 × 11495	4 × 14356	2 × 18723	4 × 18723
Dynamic load rating of ball guide (Cz)	[N]	2 × 3397	2 × 3397	4 × 10581	2 × 11934	4 × 10581	4 × 13739	2 × 17919	4 × 17919
Distance between ball guide carriages (Lx)	[mm]	87	136	141,7	-	141,7	154	-	186
Distance between ball guide carriages (Ly)	[mm]	-	-	35	35	35	49,75	49,75	80,75

Parameter		WV60	WV80	WV120	MLSM60D	MLSM80D
Geometrical moment of inertia of the profile (Iy)	[mm^4]	$5,8 \times 10^5$	$1,85 \times 10^6$	$7,7 \times 10^6$	$1,19 \times 10^6$	$3,77 \times 10^6$
Geometrical moment of inertia of the profile (Iz)	[mm^4]	$5,9 \times 10^5$	$1,94 \times 10^6$	$9,4 \times 10^6$	$1,08 \times 10^7$	$4,71 \times 10^7$
Friction factor of the guide system (μ)		no guides	no guides	no guides	0,1	0,1
Efficiency of the unit		0,8	0,8	0,8	0,8	0,8
Bending factor (b)		0,0003	0,0003	0,0003	0,0003	0,0003
Inertia of ball screw (jsp)	[kgm^2/m]	$8,46 \times 10^{-5}$	$2,25 \times 10^{-4}$	$6,34 \times 10^{-4}$	$2,25 \times 10^{-4}$	$6,34 \times 10^{-4}$
Dynamic load rating of ball screw (Cx)	[N]					
05 mm lead		10500	12300	21500	12300	21500
10 mm lead		-	13200	33400	13200	33400
20 mm lead		11600	13000	29700	13000	29700
25 mm lead		-	-	14900	-	-
40 mm lead		8400	15400	-	-	14900
50 mm lead					15400	-
Dynamic load rating of ball guide (Cy)	[N]	no guides	no guides	no guides	4 × 13770	4 × 17965
Dynamic load rating of ball guide (Cz)	[N]	no guides	no guides	no guides	4 × 13770	4 × 17965
Distance between ball guide carriages (Lx)	[mm]	no guides	no guides	no guides	163	185
Distance between ball guide carriages (Ly)	[mm]	no guides	no guides	no guides	105	164

Additional Technical Data

Linear Motion Systems with Ball Screw and Slide Guides

Technical Data

Parameter		M55	M75	M100
Geometrical moment of inertia of the profile (Iy)	[mm^4]	$4,27 \times 10^5$	$1,9 \times 10^6$	$5,54 \times 10^6$
Geometrical moment of inertia of the profile (Iz)	[mm^4]	$3,4 \times 10^5$	$1,15 \times 10^6$	$3,86 \times 10^6$
Friction factor of the guide system (μ)		0,15	0,15	0,15
Efficiency ball nut unit composite nut unit		 0,8 0,5	 0,8 0,5	 0,8 0,5
Bending factor (b)		0,0005	0,0005	0,0005
Inertia of ball screw (jsp)	[kgm^2/m]	$4,1 \times 10^{-5}$	$1,6 \times 10^{-4}$	$2,5 \times 10^{-4}$
Dynamic load rating of ball screw (Cx) 05 mm lead 05,8 mm lead 08 mm lead 10 mm lead 12,7 mm lead 20 mm lead 25 mm lead 32 mm lead	[N]	 9300 5420 - 15400 - 1900 - 2000	 10400 - - - 17960 10400 - -	 12500 - - 20600 - - 11800 -

Linear Motion Systems with Belt Drive and Ball Guides

Technical Data

Parameter		WH40	WM60Z	WM80Z	M55	M75	M100	MLSM80Z
Geometrical moment of inertia of the profile (Iy)	[mm^4]	$12,6 \times 10^4$	$5,62 \times 10^5$	$1,85 \times 10^6$	$4,59 \times 10^5$	$1,9 \times 10^6$	$5,54 \times 10^6$	$3,77 \times 10^6$
Geometrical moment of inertia of the profile (Iz)	[mm^4]	$15,3 \times 10^4$	$5,94 \times 10^5$	$1,94 \times 10^6$	$3,56 \times 10^5$	$1,15 \times 10^6$	$3,86 \times 10^6$	$4,71 \times 10^7$
Friction factor of the guide system (μ)		0,05	0,1	0,1	0,02	0,02	0,02	0,1
Efficiency of the unit		0,85	0,85	0,85	0,95	0,95	0,95	0,85
Bending factor (b)		0,0005	0,0005	0,0005	0,0005	0,0005	0,0005	0,0005
Specific mass of belt	[kg/m]	0,032	0,074	0,14	0,09	0,16	0,31	0,517
Inertia of pulleys (Jsyn)	[kgm^2]	$8,8 \times 10^{-6}$	$2,13 \times 10^{-5}$	$1,12 \times 10^{-4}$	$1,7 \times 10^{-5}$	$6,8 \times 10^{-5}$	$8,5 \times 10^{-5}$	$5,077 \times 10^{-4}$
Dynamic load rating of ball guide (Cy)	[N]	2 × 2650	2 × 12964	4 × 18723 (2 × 18723)[1]	2 × 2717	2 × 8206	2 × 13189	4 × 17965
Dynamic load rating of ball guide (Cz)	[N]	2 × 3397	2 × 11934	4 x 13739 (2 x 17919)	2 × 3484	2 × 15484	2 × 24885	4 × 17965
Distance between ball guide carriages (Lx)	[mm]	72	-	154 (-)	78	96	140	185
Distance between ball guide carriages (Ly)	[mm]	-	35	49,75	-	-	-	164

[1] Value in brackets = for short carriage.

Additional Technical Data

Linear Motion Systems with Belt Drive and Slide Guides

Technical Data

Parameter		M50	M55	M75	M100
Geometrical moment of inertia of the profile (Iy)	[mm^4]	$2{,}61 \times 10^5$	$4{,}59 \times 10^5$	$1{,}9 \times 10^6$	$5{,}54 \times 10^6$
Geometrical moment of inertia of the profile (Iz)	[mm^4]	$2{,}44 \times 10^5$	$3{,}56 \times 10^5$	$1{,}15 \times 10^6$	$3{,}86 \times 10^6$
Friction factor of the guide system (μ)		0,15	0,15	0,15	0,15
Efficiency of the unit		0,85	0,85	0,85	0,85
Bending factor (b)		0,0005	0,0005	0,0005	0,0005
Specific mass of belt	[kg/m]	0,086	0,09	0,16	0,31
Inertia of pulleys (Jsyn)	[kgm^2]	$3{,}1 \times 10^{-5}$	$1{,}7 \times 10^{-5}$	$6{,}8 \times 10^{-5}$	$8{,}5 \times 10^{-5}$

Linear Motion Systems with Belt Drive and Wheel Guides

Technical Data

Parameter		WH50	WH80	WH120	MLSH60Z
Geometrical moment of inertia of the profile (Iy)	[mm^4]	$3{,}3 \times 10^5$	$1{,}93 \times 10^6$	$6{,}69 \times 10^6$	$1{,}29 \times 10^6$
Geometrical moment of inertia of the profile (Iz)	[mm^4]	$2{,}65 \times 10^5$	$1{,}8 \times 10^6$	$6{,}88 \times 10^6$	$1{,}2 \times 10^7$
Friction factor of the guide system (μ)		0,1	0,1	0,1	0,1
Efficiency of the unit		0,85	0,85	0,85	0,85
Bending factor (b)		0,0005	0,0005	0,0005	0,0005
Specific mass of belt	[kg/m]	0,055	0,21	0,34	0,119
Inertia of pulleys (Jsyn)	[kgm^2]	$1{,}928 \times 10^{-5}$	2.473×10^{-4}	$1{,}004 \times 10^{-3}$	$4{,}604 \times 10^{-5}$
Dynamic load rating of wheel guide (Cy)	[N]	-	-	-	4 × 1266
Dynamic load rating of wheel guide (Cz)	[N]	4 × 1270	4 × 3670	4 × 16200	4 × 1266
Distance between carriage wheels (Lx)	[mm]	198	220	180	109
Distance between carriage wheels (Ly)	[mm]	39	65	97	102,5

Additional Technical Data

Linear Lifting Systems

Technical Data

Parameter		WHZ50	WHZ80	Z2	Z3
Geometrical moment of inertia of the profile (Ix)	[mm^4]	-	-	$1,87 \times 10^7$	$1,87 \times 10^7$
Geometrical moment of inertia of the profile (Iy)	[mm^4]	$3,3 \times 10^5$	$1,93 \times 10^6$	$2,19 \times 10^7$	$2,19 \times 10^7$
Geometrical moment of inertia of the profile (Iz)	[mm^4]	$2,65 \times 10^5$	$1,8 \times 10^6$	-	-
Dynamic load rating of ball screw (Fx)	[N]	belt drive	belt drive	-	-
Dynamic load rating of ball screw (Fz) ball screw ø 25 lead 10 mm ball screw ø 25 lead 25 mm ball screw ø 32 lead 10 mm	[N			 21248 11182 47200	 21248 11182 47200
Friction factor of the guide system (μ)		0,1	0,1	0,15	0,15
Efficiency of the unit		0,85	0,85	0,8	0,8
Specific mass of belt	[kg/m]	0,055	0,119	-	-
Inertia of pulleys (Jsyn)	[kgm^2]	$6,906 \times 10^{-5}$	$5,026 \times 10^{-4}$	-	-
Inertia of ball screw (jsp) ball screw ø 25 lead 10 ball screw ø 25 lead 25 ball screw ø 32 lead 10	[kgm^2/m]	 - - -	 - - -	 $2,1 \times 10^{-4}$ $2,6 \times 10^{-4}$ $6,43 \times 10^{-4}$	 $2,1 \times 10^{-4}$ $2,6 \times 10^{-4}$ $6,43 \times 10^{-4}$
Dynamic load rating of ball guide (Cx)	[N]	-	-	slide guide	slide guide
Dynamic load rating of ball guide (Cy)	[N]	4 × 1270	4 × 3670	slide guide	slide guide
Distance between ball guide carriages (Lx)	[mm]	198	220	-	-
Distance between ball guide carriages (Ly)	[mm]	39	65	slide guide	slide guide
Distance between ball guide carriages (Lz)	[mm]	-	-	slide guide	slide guide
Definition of forces		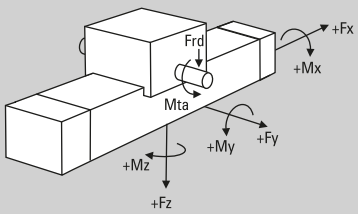		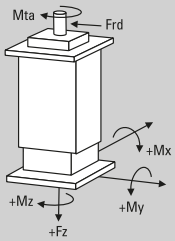	

Additional Technical Data

Linear Rod Units

Technical Data

Parameter		WZ60	WZ80
Geometrical moment of inertia of the profile (Iy)	[mm^4]	$5,8 \times 10^5$	$1,85 \times 10^6$
Geometrical moment of inertia of the profile (Iz)	[mm^4]	$5,9 \times 10^5$	$1,94 \times 10^6$
Friction factor of the guide system (μ)		0,1	0,1
Efficiency of the unit		0,8	0,8
Inertia of ball screw (jsp)	[kgm^2/m]		
05 mm lead		$8,46 \times 10^{-5}$	$2,25 \times 10^{-4}$
10 mm lead		-	$2,25 \times 10^{-4}$
20 mm lead		$8,46 \times 10^{-5}$	$2,25 \times 10^{-4}$
25 mm lead		-	-
32 mm lead		-	-
40 mm lead		-	-
50 mm lead		$8,46 \times 10^{-5}$	$2,25 \times 10^{-4}$
Dynamic load rating of ball screw (Cx)	[N]		
05 mm lead		10500	12300
10 mm lead		-	13200
20 mm lead		11600	13000
25 mm lead		-	-
32 mm lead		-	-
40 mm lead		-	-
50 mm lead		8400	15400
Dynamic load rating of ball guide (Cy)	[N]	2 × 12964	2 × 18723
Dynamic load rating of ball guide (Cz)	[N]	2 × 11943	2 × 17919
Distance between ball guide carriages (Lx)	[mm]	-	-
Distance between ball guide carriages (Ly)	[mm]	35	50
Dynamic rating of the ball bushing	[N]	8300	13700

Ordering Keys

Linear Motion Systems with Ball Screw Drive and Ball Guides

WM40S, WM40D, WM60S, WM60D, WM60X, WM80S, WM80D, WM120D

1	2	3	4	5	6	7	8	9	10
WM06D	20	LX	ZZ6	-02545	-03715	A	Z	0520	S1

1. Type of unit
WM04S = WM40S unit with single ball nut
WM04D = WM40D unit with double ball nuts
WM06S = WM60S unit with single ball nut
WM06D = WM60D unit with double ball nuts
WM06X = WM60X unit with left/right screw
WM08S = WM80S unit with single ball nut
WM08D = WM80D unit with double ball nuts
WM12D = WM120D unit with double ball nuts

2. Screw lead[1]
05 = 5 mm
10 = 10 mm
20 = 20 mm
40 = 40 mm
50 = 50 mm

3. Transmission type
LX = inline style, directly coupled, RediMount flange
SX = inline style, directly coupled, no RediMount flange

4. RediMount motor ID code
vvw = alphanumeric motor code for suitable RediMount flange when motor is known
999 = RediMount code used when motor is unknown
XXX = for units without RediMount flange

5. Maximum stroke (Smax)
- xxxxx = distance in mm

6. Total length of unit (L tot)
- yyyyy = distance in mm

7. Drive shaft / RediMount configuration[2]
A = single shaft without key way
C = single shaft with key way or RediMount
G = double shafts, first without key way and second for encoder
I = double shafts, first with key way or RediMount and second for encoder[3]

8. Carriage configuration[4]
N = single standard carriage
S = single short carriage
L = single long carriage
Z = double standard carriages
Y = double short carriages
M = double long carriages

9. Distance between double carriages (Lc)
0000 = always for single carriages
zzzz = distance in mm

10. Protection option[5]
S1 = wash down protection (not available for WM04 units)

[1] See table below for available combinations of units and ball screw leads.

Type of unit	Available screw leads [mm]				
	5	10	20	40	50
WM04S	x				
WM04D	x				
WM06S	x		x		x
WM06D	x		x		x
WM06X	x				
WM08S	x	x	x		x
WM08D	x	x	x		x
WM12D	x	x	x	x	

[2] See below for the definition of shafts.

Single and double shafts with RediMount

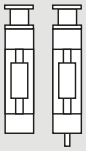

Single and double shafts without RediMount

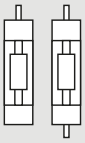

[3] Drive shaft configuration I not available for WM 40.

[4] See table below for available combinations of units and carriage types.

Type of unit	Available carriage types					
	N	S	L	Z	Y	M
WM04S	x			x		
WM04D			x			x
WM06S		x			x	
WM06D	x		x	x		
WM06X	x	x	x			
WM08S		x			x	
WM08D	x		x	x		
WM12D	x		x	x		

[5] Leave position blank if no additional protection is required.

Note! for ordering of options type EN, ES, KRG, RT, ADG and MGK, see accessory index on page 131.

Ordering Keys

Linear Motion Systems with Ball Screw Drive and No Guides

WV60, WV80, WV120

1	2	3	4	5	6	7	8	9	10
WV08D	20	SX	XXX	-02745	-03295	G	N	0000	

1. Type of unit
WV06D = WV60 unit
WV08D = WV80 unit
WV12D = WV120 unit

2. Ball screw lead[1]
05 = 5 mm
10 = 10 mm
20 = 20 mm
40 = 40 mm
50 = 50 mm

3. Transmission type
LX = inline style, directly coupled, RediMount flange
SX = inline style, directly coupled, no RediMount flange

4. RediMount motor ID code
vvw = alphanumeric motor code for suitable RediMount flange when motor is known
999 = RediMount code used when motor is unknown
XXX = for units without RediMount flange

5. Maximum stroke (Smax)
- xxxxx = distance in mm

6. Total length of unit (L tot)
- yyyyy = distance in mm

7. Drive shaft / RediMount configuration[2]
A = single shaft without key way
C = single shaft with key way or RediMount
G = double shafts, first without key way and second for encoder
I = double shafts, first with key way or RediMount and second for encoder[3]

8. Carriage configuration
N = single standard carriage

9. Distance between double carriages (Lc)
0000 = always for single carriages

10. Protection option[3]
S1 = wash down protection

[1] See table below for available combinations of units and ball screw leads.

Type of unit	Available screw leads [mm]				
	5	10	20	40	50
WV06D	x		x		x
WV08D	x	x	x		x
WV12D	x	x	x	x	

[2] See below for the definition of shafts.

Single and double shafts with RediMount

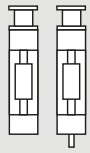

Single and double shafts without RediMount

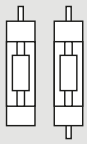

[3] Leave position blank if no additional protection is required.

Note! for ordering of options type EN, ES, KRG, RT, ADG and MGK, see accessory index on page 131.

Ordering Keys

Linear Motion Systems with Lead or Ball Screw Drive and Ball Guides

MLSM60D, MLSM80D

1	2	3	4	5	6	7	8	9
MLSM06D	20	LX	PP1	-03800	-04645	C	L	0000

1. Type of unit
MLSM06D = MLSM60 unit
MLSM08D = MLSM80 unit

2. Ball screw lead
05 = 5 mm
10 = 10 mm
20 = 20 mm
40 = 40 mm
50 = 50 mm

3. Transmission type
LX = inline style, directly coupled, RediMount flange
SX = inline style, directly coupled, no RediMount flange

4. RediMount motor ID code
vvw = alphanumeric motor code for suitable RediMount flange when motor is known
999 = RediMount code used when motor is unknown
XXX = for units without RediMount flange

5. Maximum stroke (Smax)
- xxxxx = distance in mm

6. Total length of unit (L tot)
- yyyyy = distance in mm

7. Drive shaft / RediMount configuration[2]
A = single shaft without key way
C = single shaft with key way or RediMount
G = double shafts, first without key way and second for encoder
I = double shafts, first with key way or RediMount and second for encoder[3]

8. Carriage configuration
N = single standard carriage
L = single long carriage
Z = double standard carriages

9. Distance between double carriages (Lc)
0000 = always for single carriages
zzzz = distance in mm

[1] See table below for available combinations of units and ball screw leads.

Type of unit	Available screw leads [mm]				
	5	10	20	40	50
MLSM06D	x		x		x
MLSM08D	x	x	x	x	

[2] See below for the definition of shafts.

Single and double shafts with RediMount

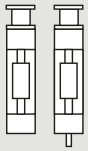

Single and double shafts without RediMount

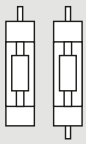

Ordering Keys

Linear Motion Systems with Ball Screw Drive and Ball Guides

M55, M75, M100

1	2	3	4	5	6	7	8	9	10
MF07S	05	LX	MC8	-01000	-01500	X	N	0000	S1

1. Type of unit
MF06S = M55 unit, ball guides, ball screw
MF07S = M75 unit, ball guides, ball screw
MF10S = M100 unit, ball guides, ball screw

2. Screw lead and tolerance class[1]
05 = 5 mm
10 = 10 mm
12 = 12,7 mm
20 = 20 mm
25 = 25 mm

3. Transmission type
LX = inline style, directly coupled, RediMount flange
SX = inline style, directly coupled, no RediMount flange

4. RediMount motor ID code
vvw = alphanumeric motor code for suitable RediMount flange when motor is known
999 = RediMount code used when motor is unknown
XXX = for units without RediMount flange

5. Maximum stroke (Smax)
- xxxxx = distance in mm

6. Total length of unit (L tot)
- yyyyy = distance in mm

7. Screw supports
X = no screw supports
S = single screw supports
D = double screw supports

8. Carriage configuration
N = single standard carriage
Z = double standard carriages

9. Distance between carriages (Lc)
0000 = for all single standard carriage units
zzzz = distance in mm between carriages

10. Protection option[2]
S1 = wash down protection

[1] See table below for available combinations of units and ball screw type, lead and tolerance.

Ball screw type	Type of unit		
	M55	M75	M100
05	x	x	x
10	x		x
12		x	
20	x	x	
25			x

[2] Leave position blank if no additional protection is required.

Ordering Keys

Linear Motion Systems with Lead or Ball Screw Drive and Ball Guides

2HB10, 2HB20

1	2	3	4	5	6	7	8	9	10	11
2HB10	H0	N1285	-038	N	001	A	0	A	0	0

1. Type of unit
2HB10 = 2HB10 unit
2HB20 = 2HB20 unit

2. Ball screw diameter, lead and nut type
G0 = 16 mm, 5 mm, preloaded (2HB10 only)
H0 = 16 mm, 10 mm, preloaded (2HB10 only)

L0 = 25 mm, 5 mm, preloaded (2HB20 only)
M0 = 25 mm, 10 mm, preloaded(2HB20 only)
N0 = 25 mm, 25 mm, preloaded (2HB20 only)

3. Ordering length (L)
N xxxxx = distance in mm

4. Y-distance
- 038 = standard distance in mm between motor end plate to first set of mounting holes on 2HB10
- 043 = standard distance in mm between motor end plate to first set of mounting holes on 2HB20
- yyy = custom distance in mm between motor end plate to first set of mounting holes

5. Brake option
N = no brake
B = brake

6. RediMount motor ID code
001 = NEMA 23
002 = NEMA 34
zzz = consult www.LinearMotioneering.com for complete list of available standard RediMount motor flanges

7. Ball guide rail coating option
A = standard
D = Duralloy

8. Ball guide carriage coating option
0 = standard
1 = Duralloy

9. Profile cover option
A = none
B = bellows (bellows will reduce stroke length app. 28%)
C = shrouds

10. Hardware option
0 = alloy plated
1 = stainless steel

11. Home and end of stroke sensor option
0 = no sensors
1 = home sensor, NPN type
2 = end of stroke sensors, NPN type
3 = home and end of stroke sensors, NPN type
4 = home sensor, PNP type
5 = end of stroke sensors, PNP type
6 = home and end of stroke sensors, PNP type

Ordering Keys

Linear Motion Systems with Lead or Ball Screw Drive and Ball Guides

2RB12, 2RB16

1	2	3	4	5	6	7	8	9	10	11
2RB12	J0	N1000	-100	N	002	B	0	A	0	0

1. Type of unit
2RB12 = 2RB12 unit
2RB16 = 2RB16 unit

2. Ball screw diameter, lead and nut type
G0 = 16 mm, 5 mm, preloaded (2RB12 only)
H0 = 16 mm, 10 mm, preloaded (2RB12 only)

I0 = 20 mm, 5 mm, preloaded (2RB16 only)
J0 = 20 mm, 10 mm, preloaded (2RB16 only)
K0 = 20 mm, 25 mm, preloaded (2RB16 only)

3. Ordering length (L)
N xxxx = distance in mm

4. Y-distance
- 075 = standard distance in mm between motor end plate to first set of mounting holes on 2RB12
- 100 = standard distance in mm between motor end plate to first set of mounting holes on 2RB16
- yyy = custom distance in mm between motor end plate to first set of mounting holes

5. Brake option
N = no brake
B = brake

6. RediMount motor ID code
001 = NEMA 23
002 = NEMA 34
zzz = consult www.LinearMotioneering.com for complete list of available standard RediMount motor flanges

7. Ball guide shaft coating option
A = standard, 60 Case
B = stainless steel (440C)
C = chrome plated
E = armoloy

8. Bearing option
0 = standard
1 = corrosion resistance

9. Profile cover option
A = none
B = bellows (bellows will reduce stroke length app. 28%)

10. Hardware option
0 = alloy plated
1 = stainless steel

11. Home and end of stroke sensor option
0 = no sensors
1 = home sensor, NPN type
2 = end of stroke sensors, NPN type
3 = home and end of stroke sensors, NPN type
4 = home sensor, PNP type
5 = end of stroke sensors, PNP type
6 = home and end of stroke sensors, PNP type

Ordering Keys

Linear Motion Systems with Lead or Ball Screw Drive and Ball Guides

MS25, MS33

1	2	3	4	5	6	7	8	9	10	11
MS25	LC	N0300	-056	N	505	A	0	A	0	0

1. Type of unit
MS25 = MS25 unit
MS33 = MS33 unit

2. Lead screw diameter, lead and nut type
LA = MS25, 0,25 inch, 0,025 in, preloaded
LB = MS25, 0,25 inch, 0,050 in, preloaded
LC = MS25, 0,25 inch, 0,062 in, preloaded
LD = MS25, 0,25 inch, 0,200 in, preloaded
LE = MS25, 0,25 inch, 0,250 in, preloaded
LF = MS25, 0,25 inch, 0,500 in, preloaded
LG = MS25, 0,25 inch, 1,000 in, preloaded
LH = MS25, 0,25 inch, 1,5 mm, preloaded
LI = MS25, 0,25 inch, 2,0 mm, preloaded
LJ = MS25, 0,25 inch, 3,0 mm, preloaded

LA = MS33, 0,375 inch, 0,0625 in, preloaded
LB = MS33, 0,375 inch, 0,100 in, preloaded
LC = MS33, 0,375 inch, 0,125 in, preloaded
LD = MS33, 0,375 inch, 0,200 in, preloaded
LE = MS33, 0,375 inch, 0,250 in, preloaded
LF = MS33, 0,375 inch, 0,375 in, preloaded
LG = MS33, 0,375 inch, 0,500 in, preloaded
LH = MS33, 0,375 inch, 1,000 in, preloaded
LI = MS33, 0,375 inch, 1,200 in, preloaded
LJ = MS33, 0,375 inch, 2,0 mm, preloaded

3. Ordering length (L)
N xxxx = distance in mm

4. Y-distance
- 045 = standard distance in mm between motor end plate to first set of mounting holes on MS25
- 055 = standard distance in mm between motor end plate to first set of mounting holes on MS33
- yyy= custom distance in mm between motor end plate to first set of mounting holes

5. Brake option
N = no brake (standard)

6. RediMount motor ID code
505 = NEMA 17
001 = NEMA 23
zzz = consult www.LinearMotioneering.com for complete list of available standard RediMount motor flanges

7. Linear guides shafting option
A = 60 case (1566)
B = stainless steel (440C)
C = chrome plated

8. Bearing type option
0 = standard
1 = corrosion resistant

9. Profile cover option
A = none
B = bellows (bellows will reduce stroke length app. 28%)

10. Hardware option
0 = alloy plated
1 = stainless steel

11. Home and end of stroke limit switch option
0 = no home or end of stroke limit switches
7 = home position limit switch
8 = end of stroke limit switches

Ordering Keys

Linear Motion Systems with Lead or Ball Screw Drive and Ball Guides

2DB08, 2DB12, 2DB16

1	2	3	4	5	6	7	8	9	10	11
2DB12	F0	N0250	-300	N	002	A	0	A	0	0

1. Type of unit
2DB08 = 2DB08 unit
2DB12 = 2DB12 unit
2DB16 = 2DB16 unit

2. Screw type, diameter, lead and nut type
A0 = leadscrew, 0.375 in, 0.100 in, preloaded (2DB08 only)
B0 = leadscrew, 0.375 in, 0.250 in, preloaded (2DB08 only)
C0 = leadscrew, 0.375 in, 0.500 in, preloaded (2DB08 only)
D0 = leadscrew, 0.375 in, 0.750 in, preloaded (2DB08 only)
E0 = leadscrew, 0.375 in, 1.000 in, preloaded (2DB08 only)

F0 = ballscrew, 0.631 in, 0.200 in, non-preloaded (2DB12 only)
V0 = ballscrew, 0.631 in, 0.200 in, preloaded (2DB12 only)
QJ = ballscrew, 0.500 in, 0.500 in, preloaded (2DB12 only)

G0 = ballscrew, 0.750 in, 0.200 in, non-preloaded (2DB16 only)
W0 = ballscrew, 0.750 in, 0.200 in, preloaded (2DB16 only)
RJ = ballscrew, 0.750 in, 0.500 in, preloaded (2DB16 only)
LJ = ballscrew, 0.631 in, 1.0 in, preloaded (2DB16 only)
D0 = ballscrew, 20 mm, 5 mm, preloaded (2DB16 only)

3. Ordering length (L)
N xxxx = distance in inch (e.g. 0250 = 25 inch)

4. Y-distance
- 200 = standard distance in inch between motor end plate to first set of mounting holes for 2DB08 (e.g. 200 = 2 in)
- 300 = standard distance in inch between motor end plate to first set of mounting holes for 2DB12 and 2DB16 (e.g. 300 = 3 in)
- yyy = custom distance in inch between motor end plate to first set of mounting holes

5. Brake option
N = no brake
B = brake

6. RediMount motor ID code
001 = NEMA 23
002 = NEMA 34
zzz = consult www.LinearMotioneering.com for complete list of available standard RediMount motor flanges

7. Ball guide shaft coating option
A = standard, 60 Case
B = stainless steel (440C)
C = chrome plated
E = Armoloy

8. Bearing option
0 = standard
1 = corrosion resistance

9. Profile cover option
A = none
B = bellows (bellows will reduce stroke length app. 28%)

10. Hardware option
0 = alloy plated
1 = stainless steel

11. Home and end of stroke sensor option
0 = no sensors
7 = home
8 = ends of travel
9 = both

Ordering Keys

Linear Motion Systems with Ball Screw Drive and Slide Guides

M55, M75, M100

1	2	3	4	5	6	7	8	9	10
MG07S	05	LX	PP2	-01000	-01500	X	N	0000	S1

1. Type of unit
MG06S = M55 unit, slide guides, ball screw
MG07S = M75 unit, slide guides, ball screw
MG10S = M100 unit, slide guides, ball screw

2. Screw lead and tolerance class[1]
05 = 5 mm
10 = 10 mm
12 = 12,7 mm
20 = 20 mm
25 = 25 mm

3. Transmission type
LX = inline style, directly coupled, RediMount flange
SX = inline style, directly coupled, no RediMount flange

4. RediMount motor ID code
vvw = alphanumeric motor code for suitable RediMount flange when motor is known
999 = RediMount code used when motor is unknown
XXX = for units without RediMount flange

5. Maximum stroke (Smax)
- xxxxx = distance in mm

6. Total length of unit (L tot)
- yyyyy = distance in mm

7. Screw supports
X = no screw supports
S = single screw supports
D = double screw supports

8. Carriage configuration
N = single standard carriage
Z = double standard carriages

9. Distance between carriages (Lc)
0000 = for all single standard carriage units
zzzz = distance in mm between carriages

10. Protection option[2]
S1 = wash down protection

[1] See table below for available combinations of units and ball screw type, lead and tolerance.

Ball screw type	Type of unit		
	M55	M75	M100
05	x	x	x
10	x		x
12		x	
20	x	x	
25			x

[2] Leave position blank if no additional protection is required.

Ordering Keys

Linear Motion Systems with Belt Drive and Ball Guides

WH40

1	2	3	4	5	6	7	8
WH04Z	LX	FB7	-01400	-01755	H	L	0400

1. Type of unit
WH04Z = WH40 unit

2. Transmission type
LX = inline style, directly coupled, RediMount flange
SX = inline style, directly coupled, no RediMount flange

3. RediMount motor ID code
vvw = alphanumeric motor code for suitable RediMount flange when motor is known
999 = RediMount code used when motor is unknown
XXX = for units without RediMount flange

4. Maximum stroke (Smax)
- xxxxx = distance in mm

5. Total length of unit (L tot)
- yyyyy= distance in mm

6. Drive shaft / RediMount flange configuration[1]
A = shaft on left side without key way
B = shaft on right side without key way
C = shaft on left side with key way or RediMount
D = shaft on right side with key way or RediMount
E = shaft on left side without key way, shaft on right side with key way or RediMount
F = shaft on left side with key way or RediMount, shaft on right side without key way
G = shaft on left side without key way, shaft on right side for encoder
H = shaft on left side for encoder, shaft on right side without key way
I = shaft on left side with key way or RediMount, shaft on right side for encoder
J = shaft on left side for encoder, shaft on right side with key way or RediMount
L = shaft on left and right side without key way
M = shaft on left side with key way or RediMount, shaft on right side with key way
N = shaft on left side with key way, shaft on right side with key way or RediMount
W = hollow shaft on both sides with clamping unit

7. Carriage configuration
N = single standard carriage
L = single long carriage
Z = double standard carriages

8. Distance between double carriages (Lc)
0000 = always for single carriages
zzzz = distance in mm

[1] See below for the definition of shafts.

Left, right or both sides with shafts with RediMount

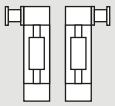

Left or right with RediMount and other side a shaft without RediMount

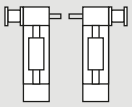

Left or right without RediMount

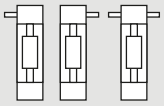

Note! for ordering of options type EN, ES, KRG, RT, ADG and MGK, see accessory index on page 131.

Ordering Keys

Linear Motion Systems with Belt Drive and Ball Guides

WM60Z, WM80Z

1	2	3	4	5	6	7	8
WM06Z	LX	AG5	-01400	-01755	H	L	0400

1. Type of unit
WM06Z = WM60Z unit
WM08Z = WM80Z unit

2. Transmission type
LX = inline style, directly coupled, RediMount flange
SX = inline style, directly coupled, no RediMount flange

3. RediMount motor ID code
vvw = alphanumeric motor code for suitable RediMount flange when motor is known
999 = RediMount code used when motor is unknown
XXX = for units without RediMount flange

4. Maximum stroke (Smax)
- xxxxx = distance in mm

5. Total length of unit (L tot)
- yyyyy= distance in mm

6. Drive shaft / RediMount flange configuration[1]
A = shaft on left side without key way
B = shaft on right side without key way
C = shaft on left side with key way or RediMount
D = shaft on right side with key way or RediMount
E = shaft on left side without key way, shaft on right side with key way or RediMount
F = shaft on left side with key way or RediMount, shaft on right side without key way
G = shaft on left side without key way, shaft on right side for encoder
H = shaft on left side for encoder, shaft on right side without key way
I = shaft on left side with key way or RediMount, shaft on right side for encoder
J = shaft on left side for encoder, shaft on right side with key way or RediMount
L = shaft on left and right side without key way
M = shaft on left side with key way or RediMount, shaft on right side with key way
N = shaft on left side with key way, shaft on right side with key way or RediMount
W = hollow shaft on both sides with clamping unit

7. Carriage configuration[2]
N = single standard carriage
S = single short carriage
L = single long carriage
Z = double standard carriages
Y = double short carriages

8. Distance between double carriages (Lc)
0000 = always for single carriages
zzzz = distance in mm

[1] See below for the definition of shafts.

Left, right or both sides with shafts with RediMount

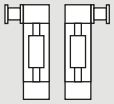

Left or right with RediMount and other side a shaft without RediMount

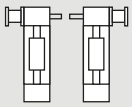

Left or right without RediMount

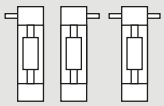

[2] See table below for available combinations of units and carriage types.

Type of unit	Available carriage types				
	N	S	L	Z	Y
WM06Z		x			x
WM08Z	x	x	x	x	x

Note! for ordering of options type EN, ES, KRG, RT, ADG and MGK, see accessory index on page 131.

Ordering Keys

Linear Motion Systems with Belt Drive and Ball Guides

M55, M75, M100

1	2	3	4	5	6	7	8	9
MF10B	LX	999	-01000	-01500	D	N	0000	S1

1. Type of unit
MF06B = M55 unit, ball guides, belt drive
MF07B = M75 unit, ball guides, belt drive
MF10B = M100 unit, ball guides, belt drive

2. Transmission type
LX = inline style, directly coupled, RediMount flange
SX = inline style, directly coupled, no RediMount flange

3. RediMount motor ID code
vvw = alphanumeric motor code for suitable RediMount flange when motor is known
999 = RediMount code used when motor is unknown
XXX = for units without RediMount flange

4. Maximum stroke (Smax)
- xxxxx = distance in mm

5. Total length of unit (L tot)
- yyyyy = distance in mm

6. Drive shaft / RediMount flange configuration[1]
C = shaft on left side with key way or RediMount
D = shaft on right side with key way or RediMount
M = shaft on left side with key way or RediMount, shaft on right side with key way
N = shaft on left side with key way, shaft on right side with key way or RediMount

7. Carriage configuration
N = single standard carriage
Z = double standard carriages

8. Distance between carriages (Lc)
0000 = for all single standard carriage units
zzzz = distance in mm between carriages

9. Protection option
S1 = wash down protection (blank if no protection option required).

[1] See below for the definition of shafts.

Left, right or both sides with shafts with RediMount

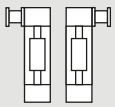

Left or right with RediMount and other side a shaft without RediMount

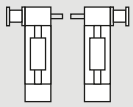

Left or right without RediMount

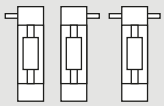

Ordering Keys

Linear Motion Systems with Belt Drive and Ball Guides

MLSM80Z

1	2	3	4	5	6	7	8
MLSM08Z	SX	XXX	-03800	-04645	C	L	0000

1. Type of unit
MLSM08Z = MLSM80 unit

2. Transmission type
LX = inline style, directly coupled, RediMount flange
SX = inline style, directly coupled, no RediMount flange

3. RediMount motor ID code
vvw = alphanumeric motor code for suitable RediMount flange when motor is known
999 = RediMount code used when motor is unknown
XXX = for units without RediMount flange

4. Maximum stroke (Smax)
- xxxxx = distance in mm

5. Total length of unit (L tot)
- yyyyy = distance in mm

6. Drive shaft / RediMount flange configuration[1]
A = shaft on left side without key way
B = shaft on right side without key way
C = shaft on left side with key way or RediMount
D = shaft on right side with key way or RediMount
E = shaft on left side without key way, shaft on right side with key way or RediMount
F = shaft on left side with key way or RediMount, shaft on right side without key way
G = shaft on left side without key way, shaft on right side for encoder
H = shaft on left side for encoder, shaft on right side without key way
I = shaft on left side with key way or RediMount, shaft on right side for encoder
J = shaft on left side for encoder, shaft on right side with key way or RediMount
L = shaft on left and right side without key way
M = shaft on left side with key way or RediMount, shaft on right side with key way
N = shaft on left side with key way, shaft on right side with key way or RediMount
W = hollow shaft on both sides with clamping unit

7. Carriage configuration
N = single standard carriage
L = single long carriage
Z = double standard carriages

8. Distance between double carriages
0000 = always for single carriages
zzzz = distance in mm

[1] See below for the definition of shafts.

Left, right or both sides with shafts with RediMount

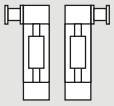

Left or right with RediMount and other side a shaft without RediMount

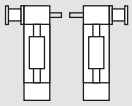

Left or right without RediMount

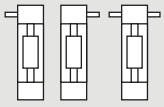

Ordering Keys

Linear Motion Systems with Belt Drive and Slide Guides

M50, M55, M75, M100

1	2	3	4	5	6	7	8	9
MG07B	LX	DE5	-01000	-01500	D	N	0000	S1

1. Type of unit
MG05B = M50 unit, slide guides, belt drive
MG06B = M55 unit, slide guides, belt drive
MG07B = M75 unit, slide guides, belt drive
MG10B = M100 unit, slide guides, belt drive

2. Transmission type
LX = inline style, directly coupled, RediMount flange
SX = inline style, directly coupled, no RediMount flange

3. RediMount motor ID code
vvw = alphanumeric motor code for suitable RediMount flange when motor is known
999 = RediMount code used when motor is unknown
XXX = for units without RediMount flange

4. Maximum stroke (Smax)
- xxxxx = distance in mm

5. Total length of unit (L tot)
- yyyyy = distance in mm

6. Drive shaft / RediMount flange configuration[1]
C = shaft on left side with key way or RediMount
D = shaft on right side with key way or RediMount
M = shaft on left side with key way or RediMount, shaft on right side with key way
N = shaft on left side with key way, shaft on right side with key way or RediMount

7. Carriage configuration
N = single standard carriage
Z = double standard carriages (not possible for MG05B)

8. Distance between carriages (Lc)
0000 = for all single standard carriage units
zzzz = distance in mm between carriages (not possible for MG05B)

9. Protection option[2]
S1 = wash down protection (not possible for MG05B)
S2 = enhanced wash down protection (not possible for MG05B)

[1] See below for the definition of shafts.

Left, right or both sides with shafts with RediMount

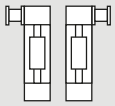

Left or right with RediMount and other side a shaft without RediMount

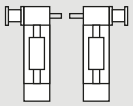

Left or right without RediMount

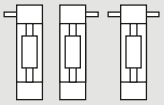

[2] Leave position blank if no additional protection is required.

Ordering Keys

Linear Motion Systems with Belt Drive and Wheel Guides

WH50, WH80, WH120

1	2	3	4	5	6	7	8	9
WH08Z	LX	BT8	-02300	-02710	N	L	0000	S2

1. Type of unit
WH05Z = WH50 unit
WH08Z = WH80 unit
WH12Z = WH120 unit

2. Transmission type
LX = inline style, directly coupled, RediMount flange
SX = inline style, directly coupled, no RediMount flange

3. RediMount motor ID code
vvw = alphanumeric motor code for suitable RediMount flange when motor is known
999 = RediMount code used when motor is unknown
XXX = for units without RediMount flange

4. Maximum stroke (Smax)
- xxxxx = distance in mm

5. Total length of unit (L tot)
- yyyyy = distance in mm

6. Drive shaft / RediMount flange configuration[1]
A = shaft on left side without key way
B = shaft on right side without key way
C = shaft on left side with key way or RediMount
D = shaft on right side with key way or RediMount
E = shaft on left side without key way, shaft on right side with key way or RediMount
F = shaft on left side with key way or RediMount, shaft on right side without key way
G = shaft on left side without key way, shaft on right side for encoder
H = shaft on left side for encoder, shaft on right side without key way
I = shaft on left side with key way or RediMount, shaft on right side for encoder
J = shaft on left side for encoder, shaft on right side with key way or RediMount
K = hollow shaft on both sides without clamping unit
L = shaft on left and right side without key way
M = shaft on left side with key way or RediMount, shaft on right side with key way
N = shaft on left side with key way, shaft on right side with key way or RediMount
V = hollow shaft on both sides for Micron DT/DTR planetary gear option
W = hollow shaft on both sides with clamping unit

7. Carriage configuration
N = single standard carriage
L = single long carriage
Z = double standard carriages

8. Distance between double carriages
0000 = always for single carriages
zzzz = distance in mm

9. Protection option[2]
S1 = wash down protection
S2 = enhanced wash down protection

[1] See below for the definition of shafts.

Left, right or both sides with shafts with RediMount

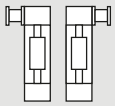

Left or right with RediMount and other side a shaft without RediMount

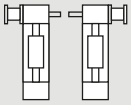

Left or right without RediMount

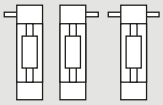

[2] Leave position blank if no additional protection is required.

Note! for ordering of options type EN, ES, KRG, RT, ADG and MGK, see accessory index on page 131.

Ordering Keys

Linear Motion Systems with Belt Drive and Wheel Guides

MLSH60Z

1	2	3	4	5	6	7	8
MLSH06Z	SX	XXX	-04500	-05580	D	D	0600

1. Type of unit
MLSH06Z = MLSH60 unit

2. Transmission type
LX = inline style, directly coupled, RediMount flange
SX = inline style, directly coupled, no RediMount flange

3. RediMount motor ID code
vvw = alphanumeric motor code for suitable RediMount flange when motor is known
999 = RediMount code used when motor is unknown
XXX = for units without RediMount flange

4. Maximum stroke (Smax)
- xxxxx = distance in mm

5. Total length of unit (L tot)
- yyyyy = distance in mm

6. Drive shaft / RediMount flange configuration[1]
A = shaft on left side without key way
B = shaft on right side without key way
C = shaft on left side with key way or RediMount
D = shaft on right side with key way or RediMount
E = shaft on left side without key way, shaft on right side with key way or RediMount
F = shaft on left side with key way or RediMount, shaft on right side without key way
G = shaft on left side without key way, shaft on right side for encoder
H = shaft on left side for encoder, shaft on right side without key way
I = shaft on left side with key way or RediMount, shaft on right side for encoder
J = shaft on left side for encoder, shaft on right side with key way or RediMount
L = shaft on left and right side without key way
M = shaft on left side with key way or RediMount, shaft on right side with key way
N = shaft on left side with key way, shaft on right side with key way or RediMount

7. Carriage configuration
N = single standard carriage
L = single long carriage
Z = double standard carriages

8. Distance between double carriages
0000 = always for single carriages
zzzz = distance in mm

[1] See below for the definition of shafts.

Left, right or both sides with shafts with RediMount

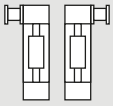

Left or right with RediMount and other side a shaft without RediMount

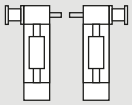

Left or right without RediMount

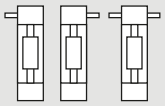

Ordering Keys

Linear Lifting Units

WHZ50, WHZ80

1	2	3	4	5	6	7	8	9
WHZ05Z	LX	KB5	-01000	-01410	A	N	0000	

1. Type of unit
WHZ05Z = WHZ50 unit
WHZ08Z = WHZ80 unit

2. Transmission type
LX = inline style, directly coupled, RediMount flange
SX = inline style, directly coupled, no RediMount flange

3. RediMount motor ID code
vvw = alphanumeric motor code for suitable RediMount flange when motor is known
999 = RediMount code used when motor is unknown
XXX = for units without RediMount flange

4. Maximum stroke (Smax)
- xxxxx = distance in mm

5. Total length of unit (L tot)
- yyyyy = distance in mm

Note! for ordering of options type EN, ES, KRG, RT, ADG and MGK, see accessory index on page 131.

6. Drive shaft / RediMount flange configuration[1]
A = shaft on left side without key way
B = shaft on right side without key way
C = shaft on left side with key way or RediMount
D = shaft on right side with key way or RediMount
E = shaft on left side without key way, shaft on right side with key way or RediMount
F = shaft on left side with key way or RediMount, shaft on right side without key way
G = shaft on left side without key way, shaft on right side for encoder
H = shaft on left side for encoder, shaft on right side without key way
I = shaft on left side with key way or RediMount, shaft on right side for encoder
J = shaft on left side for encoder, shaft on right side with key way or RediMount
L = shaft on left and right side without key way
M = shaft on left side with key way or RediMount, shaft on right side with key way
N = shaft on left side with key way, shaft on right side with key way or RediMount
V = hollow shaft on both sides for Micron DT/DTR planetary gear option
W = hollow shaft on both sides with clamping unit

7. Carriage configuration
N = single standard carriage
L = single long carriage
Z = double standard carriages

8. Distance between double carriages
0000 = always for single carriages
zzzz = distance in mm

9. Protection option[2]
S1 = wash down protection

[1] See below for the definition of shafts.

Left or right with RediMount

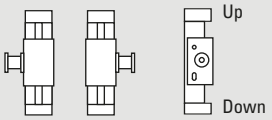

Left or right with RediMount and other side a shaft without RediMount

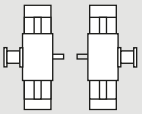

Left, right or both sides with shafts without RediMount

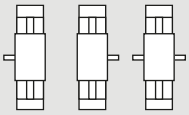

[2] Blank if no additional protection is required.

Z2, Z3

1	2	3	4
MGZ3K	25259	-250	450

1. Type of unit
MGZ2K = Z2 unit
MGZ3K = Z3 unit

2. Ball screw diameter, lead and tolerance class
25109 = 25 mm, 10 mm, T9
25259 = 25 mm, 25 mm, T9
32207 = 32 mm, 20 mm, T7

3. Minimum retracted length (L min)
- ••• = distance in cm

4. Maximum extended length (L max)
••• = distance in cm

Ordering Keys

Linear Rod Units

WZ60, WZ80

1	2	3	4	5	6
WZ06S	20	-00350	-00780	C	N

1. Type of unit
WZ06S = WZ60 unit
WZ08S = WZ80 unit

2. Ball screw lead
05 = 5 mm
10 = 10 mm
20 = 20 mm
50 = 50 mm

3. Maximum stroke (Smax)
- xxxxx = distance in mm

4. Total length of unit (L tot)
- yyyyy = distance in mm

5. Drive shaft configuration
A = shaft without key way
C = shaft with key way

6. Extension tube configuration
N = standard

[1] See table below for available combinations of units and screw leads.

Type of unit	Available screw leads [mm]			
	5	10	20	50
WZ06S	x		x	x
WZ08S	x	x	x	x

Note! for ordering of options type EN, ES, KRG, RT and MGK, see accessory index on page 131.

Ordering Keys

Non-driven Linear Motion Systems

WH40N, WH50N, WH80N, WH120N

1	2	3	4	5	6	7	8
WH04N00	SX	XXX	-04500	-04640	K	L	0000

1. Type of unit
WH04N00 = WH40N unit
WH05N00 = WH50N unit
WH08N00 = WH80N unit
WH12N00 = WH120N unit

2. Transmission type
SX = inline style, directly coupled, no RediMount flange

3. RediMount motor ID code
XXX = for units without RediMount flange

4. Maximum stroke (Smax)
- xxxxx = distance in mm

5. Total length of unit (L tot)
- yyyyy = distance in mm

6. Drive shaft / RediMount flange configuration
K = no shaft or RediMount flange

7. Carriage configuration
N = single standard carriage
L = single long carriage
Z = double standard carriages

8. Distance between double carriages
0000 = always for single carriages
zzzz = distance in mm

WM40N, WM60N, WM80N, WM120N

1	2	3	4	5	6	7	8
WM08N00	SX	XXX	-07100	-07210	K	N	0000

1. Type of unit
WM04N00 = WM40N unit
WM06N00 = WM60N unit
WM08N00 = WM80N unit
WM12N00 = WM120N unit

2. Transmission type
SX = inline style, directly coupled, no RediMount flange

3. RediMount motor ID code
XXX = for units without RediMount flange

4. Maximum stroke (Smax)
- xxxxx = distance in mm

5. Total length of unit (L tot)
- yyyyy = distance in mm

6. Drive shaft / RediMount flange configuration
K = no shaft or RediMount flange

7. Carriage configuration[1]
N = single standard carriage
S = single short carriage
L = single long carriage
Z = double standard carriages
Y = double short carriages

8. Distance between double carriages
0000 = always for single carriages
zzzz = distance in mm

Type of unit	Available carriage types				
	N	S	L	Z	Y
WM04N	x		x	x	
WM06N	x	x	x	x	x
WM08N	x	x	x	x	x
WM12N	x		x	x	

Ordering Keys

Non-driven Linear Motion Systems

M75N, M100N

1	2	3	4	5	6	7	8	9
MG10N00	SX	XXX	-04500	-04800	K	N	0000	S1

1. Type of unit
MG07N00 = M75N unit with slide guides
MG10N00 = M100N unit with slide guides
MF07N00 = M75N unit with ball guides
MF10N00 = M100N unit with ball guides

2. Transmission type
SX = inline style, directly coupled, no RediMount flange

3. RediMount motor ID code
XXX = for units without RediMount flange

4. Maximum stroke (Smax)
- xxxxx = distance in mm

5. Total length of unit (L tot)
- yyyyy = distance in mm

6. Drive shaft / RediMount flange configuration
K = no shaft or RediMount flange

7. Carriage configuration
N = single standard carriage
Z = double standard carriages

8. Distance between double carriages
0000 = always for single carriages
zzzz = distance in mm

6. Protection option[1]
S1 = wash down protection

[1] Leave blank if no protection option required.

Terminology

Basic Linear Motion System Terminology

Screw Driven Unit

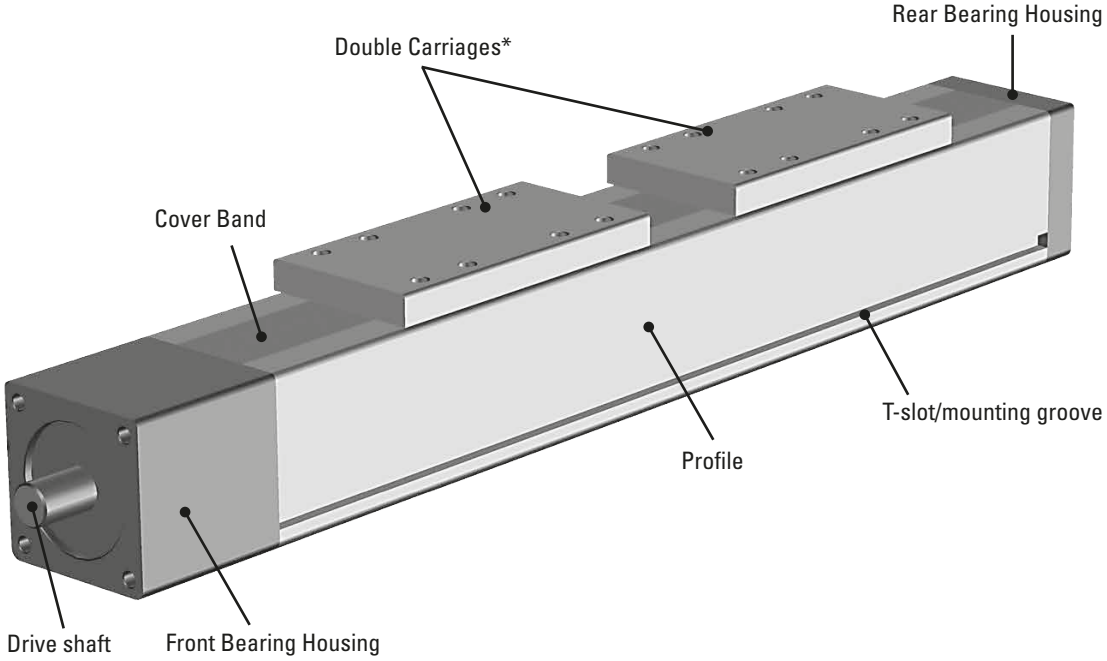

Belt Driven Unit

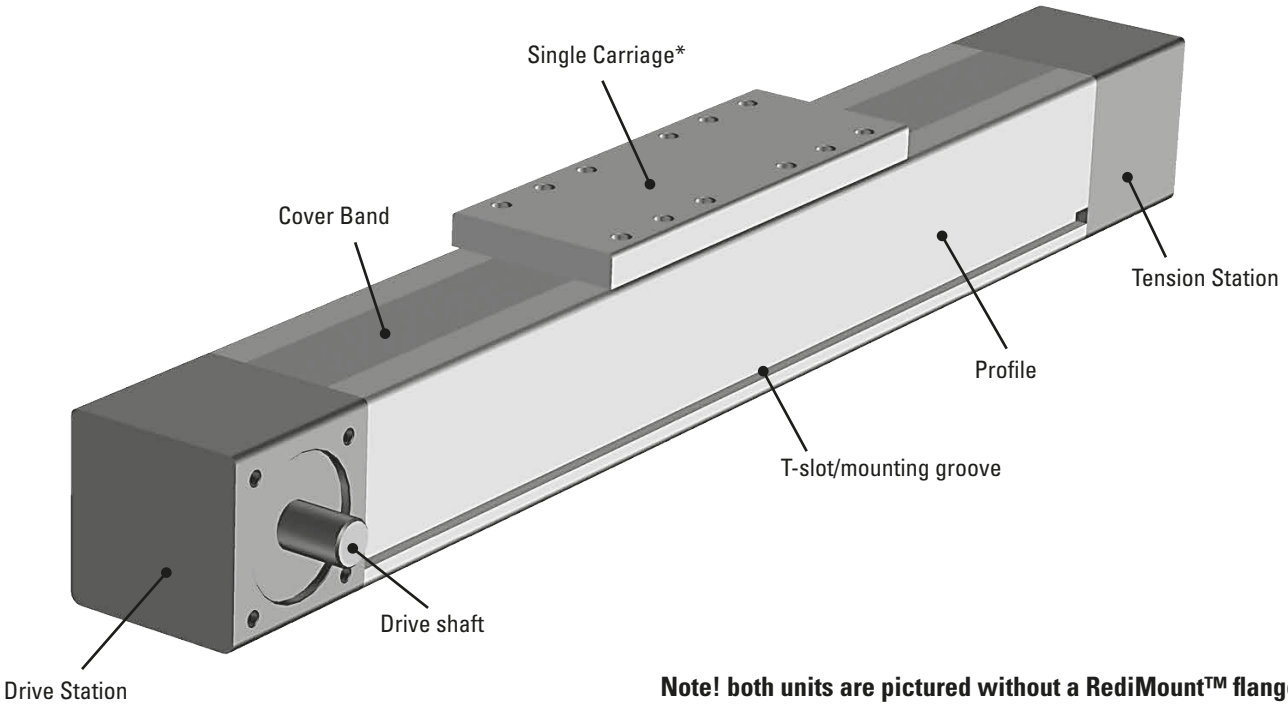

Note! both units are pictured without a RediMount™ flange

* Both screw and belt driven units can have single or double carriages.

Glossary

A - Belt D

Acceleration
Acceleration is a measure of the rate of speed change going from standstill (or a lower speed) to a higher speed. Please contact customer service if your application is critical to which acceleration rate is acceptable or needed.

Accuracy
There are several types of accuracy and many different factors that will affect the overall accuracy of a system. Also see “Repeatability”, “Positioning Accuracy”, “Resolution”, “Lead Accuracy” and “Backlash”.

Backlash
Backlash is the stack up of tolerances (play) within the leadscrew/belt transmission assembly and gearing which creates a dead band when changing directions. The result is that the motor can rotate some before any motion can be seen on the carriage when reversing the direction of the motor rotation. The backlash varies depending of the liner motion system model.

Ball Guides
A ball guide consists of a ball rail and a ball bushing. The ball rail is made of hardened steel and runs along the inside of the profile. The ball bushing is attached to the carriage of the unit and contains balls that roll against the rail. The balls in the bushing can be recirculating or have fixed ball positions depending on the type of ball guide. The recirculating type has a longer life and better load capability while the fixed type typically is much smaller. Thomson uses three major types of ball guides in its linear motion systems. Either the compact single rail type with recirculating ball bushing (A), the stronger double rail type also with recirculating ball bushings (B) or the fixed ball position ball bushings type (not shown) which require very little space and are used in the smallest units. Ball guides offer high accuracy, high loads and medium speed.

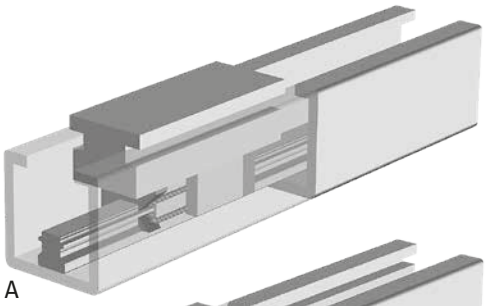

A

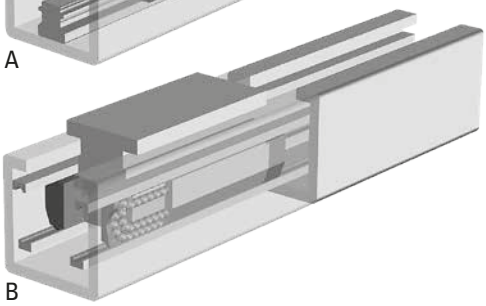

B

Ball Screw Drive
A ball screw is made up of a rotating screw and a moving ball nut. The ball nut is attached to the carriage of the unit. It does not have a normal thread, instead balls circulate inside the nut making it work as an efficient ball bearing that travels along the screw. Ball screws come in a large variety of leads, diameters and tolerance classes. The tolerance class (T3, T5, T7 or T9) indicates the lead tolerance of the screw. The lower the number, the higher the tolerance. High load capability and high accuracy are typical features of ball screw driven units.

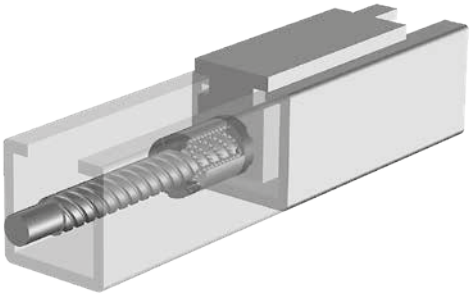

Bearing Housing
Screw driven units has two bearing housings, front and rear. The front bearing housing has a drive shaft while the rear has none. Sometimes however the rear housing can have an optional output shaft which is used to connect to an encoder.

Bell House Flange
A bell house flange is used when a motor should be connected directly to the drive shaft of a linear motion system, i.e when it is direct driven. The bell house has the bolt pattern of the motor flange in one end and the bolt pattern of the drive shaft flange in the other while the two shafts are joined by a coupling. Also see “Direct Drive”.

Belt Drive
A belt drive consists of a toothed belt which is attached to the carriage of the unit. The belt runs between two pulleys positioned at either end of the profile. One pulley is attached to the motor via the drive shaft in the drive station while the other is mounted in a tension station. The belts are made of plastic reinforced with steel cords. High speeds, long stroke, low noise and low overall weight are typical features of belt driven units

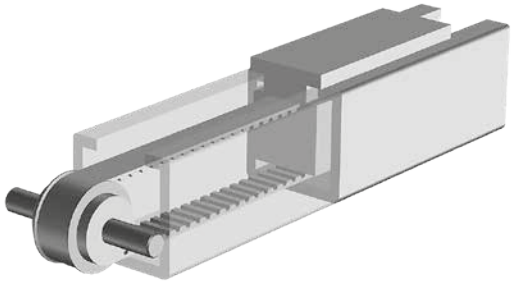

.

Glossary

Belt G - C

Belt Gear
A belt gear consists of a timing belt that runs between two pulley wheels of different diameters. The difference between the diameters determines the gear ratio. Belt gears are quiet, have medium accuracy and require no maintenance but are susceptible to belt breakage under overload conditions.

Brake
None of the units are equipped with a brake or are self-locking which means that a vertical unit will drop the carriage/load if no external brake (such as a brake in the motor, etc.) is applied to the drive shaft. In the case of belt driven units care must be taken as the carriage/load will drop immediately in the case of a belt breakage. This is particularly important in vertical applications. You also may want to incorporate a brake in to the system to ensure fast and secure stops at an emergency stop or a power failure. In this case the brake should be of the failsafe type, i.e. a brake that is engaged when power is off and lifted when it is on.

Carriage
The carriage is the moving member which travel along the profile of the unit to which the load is attached. Some units can have multiple carriages in order to distribute the weight of the load over a greater distance, this will however reduce the available stroke for a given profile length. There are also units having the option of short or long carriage. The short can carry less weight than a standard one but has a slightly longer stroke for a given profile length while the longer works the other way around. It is possible to fix the carriage(s) to the foundation and let the profile act as the moving member if so desired. This is often the case in vertical applications where you let the profile lift and lower the load.

CE Certificate
Linear motion systems do not need and do therefore not have any CE certification. All Thomson linear motion systems are however designed in accordance with the CE regulations and comes with a manufacturers declaration to prove this. Once the linear motion system is used or made in to a machine it is the responsibility of the end customer to make sure the entire machine that the linear motion system is a part of is in accordance with the applicable CE regulations, produce the documents that proves this and apply a CE mark to the machine.

Cover Band
Cover bands are used on some units to protect them from the ingress of foreign objects through the opening in the profile where the carriage runs and can be made of plastic (A) or stainless steel (B). In the case of plastic the cover band seals the profile by snapping into small grooves running along the carriage opening. In the case of stainless steel the cover band seal the profile magnetically using magnet strips mounted on each side of the carriage opening. Some units also have a self-adjusting cover band tensioning mechanism that eliminates any slack in the cover band that can occur from temperature changes, thus improving the sealing degree and the expected life of the cover band.

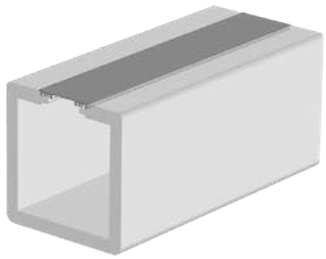

A

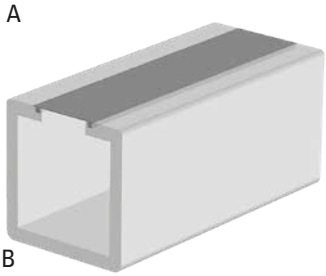

B

Critical Speed
All ball screws have a critical speed where the screw starts to vibrate and eventually bend or warp the screw. The exact limit is a function of how long the screw is and the speed. For some units this means that the allowed maximum speed found in the performance specifications can be higher than the critical speed when the stroke exceeds a certain distance. In this case, either the speed must be reduced to the critical speed, the amount of stroke must be reduced, or you must use the screw support option if the unit in question allows this. Otherwise you must select another unit that can manage the speed at that stroke. The critical speed limits can be found in the "Critical Speed" diagrams on the product pages of the units that this concern.

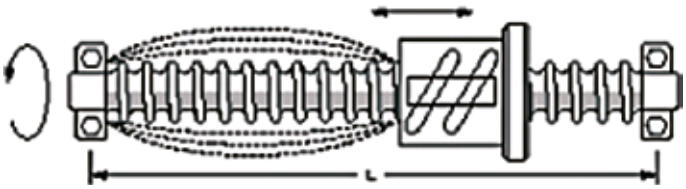

Customization
Despite the large range of linear motion systems offered by Thomson you may not find the exact unit to suit your application. But whatever your need is, Thomson is ready to help you to customize a unit according to your requirements. Please contact customer service for more information.

Cycle
One cycle is when the carriage has travelled back and forth over the complete stroke of the unit one time.

Glossary

D - E

Deceleration
Deceleration is a measure of the rate of speed change going from a higher speed to a lower speed (or standstill). Please contact customer service if your application is critical to which deceleration rate is acceptable or needed.

Definition of Forces
The designations of the forces that acts on the unit are defined on the product page of each unit in the "Definition of Forces" drawing (see example below). Please always use the same definitions whenever communicating with Thomson.

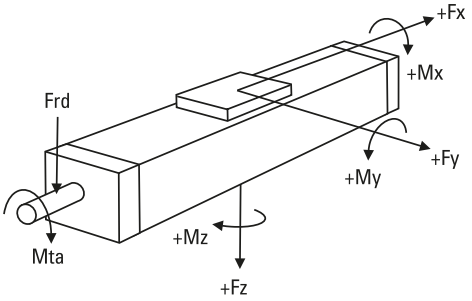

Deflection of the Profile
Some units require support along the whole profile whilst some are self-supporting over a specified span. Further details can be found on the product data pages. The recommended support intervals should be followed to minimize deflection of the unit. The maximum distance between the support points is shown on the product data pages. The deflection of the unit can also be calculated using the information in the "Additional data and calculations" section.

Direct Drive
Direct drive means that there is no gearing between the motor and the drive shaft of the linear motion system. Instead the motor is connected to the unit directly via a coupling and a bell house adapter flange. Also see "Bell House Flange".

Double Ball Nuts
Using double ball nuts will increase the repeatability of the unit. The ball nuts are installed so that they are pre-tensioned against each other eliminating the play between the nuts and the screw. A double nut unit will have a slightly shorter stroke for a given overall length.

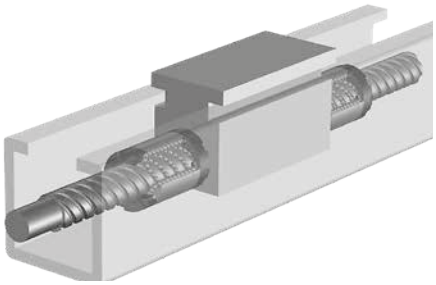

Double Carriages
Double carriage units have two carriages which gives them higher load capabilities than single carriage units. When ordering a double carriage unit the distance between the two carriages needs to be defined. This distance is called L_A or L_C depending on the model.

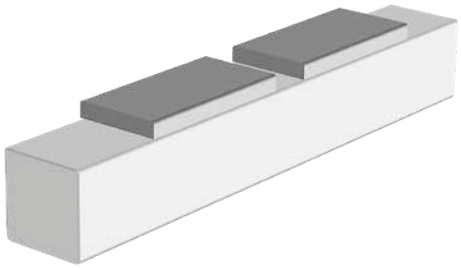

Drive Shaft
The drive shaft is the is the shaft to which the motor is connected, either directly, via a bell house flange or via a gear box. There are many sizes and types of drive shafts, such as shafts with or without key way or hollow shafts, depending on the type and size of the unit. Belt driven units can often have two drive shafts (same or different type and size), one on each side of the drive station, while screw driven only have on pointing out of the end of the unit. Customized drive shafts are possible, please contact customer service for more information.

Drive Station
The drive station is the mechanical assembly in one of the ends of a belt driven unit where the drive shaft is situated.

Duty Cycle
All units are designed for a 100% duty cycle. However, where the unit runs at extreme load, speed, acceleration and temperature or for long operating periods the expected life time may be reduced.

Encoder Feedback
Encoders provide a digital output signal in the form of a square shaped pulse train that can be used to determine the position of the extension tube. The encoder signal in a servo motor system is connected to the motion control so that it can control the servo drive and hence close the position feedback loop.

End of Stroke Limit Switches
If a unit runs at speed to the ends of its stroke there is a risk of damage. Damage can be prevented by using end of stroke limit switches to detect and engage a brake and/or cut power to the motor when the unit nears the end of the unit. You must ensure that there is sufficient distance between the end of stroke limit switch and the end of the unit, to allow the carriage to come to a complete stop before colliding with the end. The required stopping distance depends on the speed and the load and will have to be calculated for each application. The stopping distance must be taken into account when defining the necessary stroke.

Glossary

G - M

Guides
Guides are in essence a form of linear bearings on which the carriage(s) travel. Thomson uses three main types of guides that all have different characteristics and which to choose depends on the demands of the application. Also see “Ball Guides”, “Slide Guides” and “Wheel Guides”.

Idle Torque
Idle torque is the torque needed to move the carriage with no load in it by rotating the drive shaft. The idle torque will vary with the input speed and the idle torque tables on the product pages gives a value for some speeds. The value given in the table is for a unit having a single carriage of standard length. If you need the exact value for another speed, multiple carriages or short/long carriages, please contact our customer service.

Inertia
Inertia is the property of an object to resist speed changes and is dependent on the shape and the mass of the object. The inertia is important when sizing and selecting and also when tuning a servo system to optimum performance. Consult customer service for more information.

Input Shaft
The input shaft is the shaft to which the power source (motor) is connected to on a gear box. Primary shaft is another term for this. Sometimes the drive shaft on a linear unit also is referred to as the input shaft.

Input Speed
Input speed is the rotational speed that the drive shaft/input shaft of a linear motion system or a gear box is subjected to.

Installation and Service Manual
Each linear motion system has an installation and service manual to answer typical questions about mounting and servicing the unit.

Lead Accuracy
Lead accuracy is a measure of how accurate the lead of a ball screw is. For a ball screw with a lead of 25 mm, the screw should in theory move the nut 25 mm per each revolution. In reality there will be a deviation between the expected traveling distance and what is actually achieved. The deviation is typically for a ball screw 0,05 mm per 300 mm of stroke. Contact customer service for more information.

Left/right Moving Carriages
Units with left/right moving carriages have two carriages moving in opposite directions when the drive shaft is rotated. This type of unit has a ball screw where half of the screw has a left hand thread and the other half a right hand thread.

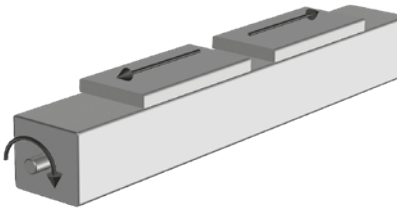

Lifetime Expectancy
When determining the lifetime for a linear motion system it is necessary to evaluate all forces and moments that are acting on the unit. The data and formulas given in this catalogue serve as a basis for this. For a more detailed lifetime calculation please use our sizing and selection software. Please contact us for further guidance.

Linear Lifting System
A linear lifting system is in essence a linear motion system specially designed for vertical lifting applications. Some units can be used in horizontal applications as well under certain criteria. Please contact us if you plan to mount a lifting unit in any other position than vertically with the load carrying plate pointing down.

Linear Motion System
A linear motion system is a mechanical assembly that translates the rotating motion of a motor to the linear motion of a carriage that travel along a load supporting beam/profile. Other names for linear motion systems are linear units, linear drive units and rodless actuators among others.

Load Rating
There are many types of load ratings that all needs to be considered. Normally when you speak about the load you refer to the load that the carriage will move; which is the dynamic load. But there may also be static, side, moment and forces from acceleration, deceleration, gravity and friction that are all equally important. For some units the load and load torque values are given for both the complete unit and the guiding system. The values for the complete unit are the values under which the unit can operate. The values for the guiding system should only be used when comparing different units and do not describe the actual performance of the complete unit.

Maintenance
Most units require lubrication. General lubrication requirements can be found in the general specifications table on the product data pages. The lubrication intervals, grease qualities and specific lubrication instructions can be found in the installation and service manual of each unit. No other regular maintenance is needed except for normal cleaning and inspection. Units with a cover band may also require irregular cover band replacement due to wear. The belt in belt driven units should not require re-tensioning under normal operating conditions.

Manufacturers Declaration
All Thomson linear motion systems comes with a manufacturers declaration to prove that it is built according to the CE regulations.

Mounting
Most units can be mounted in any direction. Any restrictions on mounting positions are shown on the product presentation pages at the beginning of each product category chapter. Even where units may be mounted in any direction there are some considerations. None of the units are self-locking which means that a vertical unit will drop the carriage/load if no

Glossary

N - Sc

external brake (such as a brake in the motor, etc.) is applied to the drive shaft of the unit. In the case of belt driven units care must be taken as the carriage/load will drop immediately in the case of a belt breakage. This is particularly important in vertical applications. All ball screw driven units are equipped with a safety nut to prevent the carriage/load being released in case of ball breakage.

Non-driven Linear Motion Systems

A non-driven linear motion system has no drive shaft or any type of transmission. In reality a non-driven linear motion system is a guide that has the same look and outer dimensions as the driven version. Normally a non-driven unit is used together with a parallel working driven unit that are mechanically linked where the non-driven unit help to share to load with the driven one.

Non-guided Linear Motion Systems

A non-guided linear motion system has a drive shaft and a ball screw but no guides. In reality a non-guided linear motion system is a enclosed ball screw assembly with a carriage that has the same look and outer dimensions as the driven version. Using a non-guided unit requires some kind of external guide to which the carriage can be attached.

Operation and Storage Temperature

Operational temperature limits can be found in the performance tables on the product data pages. Units can be stored or transported within the same temperature range. Please contact us if the unit will be exposed to higher/lower temperatures than recommended during storage or transportation.

Output Shaft

The output shaft is the shaft on a gear box that is connected to object being driven by the gear box. Another term for output shaft is secondary shaft.

Packages and Multi Axis Kits

Thomson can offer complete pre-defined packages (linear motion system, gear and servo motor assembled and shipped with servo drive and cables) as well as mounting kits for the creation of two and three axis systems. Please contact us for further information.

Positioning Accuracy

Positioning accuracy is the error between the the expected and actual position and is the sum of all factors that will reduce the accuracy (i.e. repeatability, backlash, resolution, screw/belt accuracy, and the accuracy of the motor, drive and motion control system). Some of these factors, such as backlash and lead accuracy, can sometimes be compensated for in the software of the motion control system being used. Also see “Accuracy”.

Position Feedback

The position of the carriage/rod/lifting profile can be obtained in many ways. The most common way is to equip the unit with an encoder or to use a motor which has a built in feedback device (encoder, resolver, etc.). To many units there are encoders or/and encoder mounting kits available. See the accessory chapter.

Repeatability

Repeatability is the ability for a positioning system to return to a location when approaching from the same distance, at the same speed and deceleration rate. Some of the factors that affect the repeatability are the angular repeatability of the motor, drive and motion control system, system friction and changes in load, speed and deceleration.

Resolution

Resolution is the smallest move increment that the system can perform. Some of the factors that affect the resolution are the angular repeatability of the motor, drive and motion control system, system friction, the drive train reduction, the lead/type of the ball screw/belt and changes in load, speed and deceleration.

Resolver

A resolver is basically a type of rotary electrical transformer used for measuring degrees of rotation and are commonly used on AC servo motors as a feedback device to control the commutation of the motor windings. The resolver is mounted to the end of motor shaft and when the motor rotates the resolver will transmit the position and direction of the rotor to the servo drive which then can control the motor. Most servo drives for AC servo motors on the market today can convert the resolver signal in to a pulse train (encoder signal simulation) which can be used by a motion control to determine and control the position of the motor. Also see “Encoder Feedback”.

RoHS Compliance

The RoHS directive stands for “the restriction of the use of certain hazardous substances in electrical and electronic equipment”. This directive bans the placing on the EU market of new electrical and electronic equipment containing more than agreed levels of lead, cadmium, mercury, hexavalent chromium, polybrominated biphenyl (PBB) and polybrominated diphenyl ether (PBDE) flame retardants. All linear motion systems and accessories sold in the EU are RoHS compliant.

Screw Supports

Screw supports allow screw driven units to travel at high speed even when stroke becomes longer. The supports reduce the unsupported length of the screw, that otherwise would be subjected to vibrations. Screw supports come in single (one screw support on each side of the carriage) or double (two supports on each side) versions. Screw support units will have a slightly shorter stroke for a given overall length.

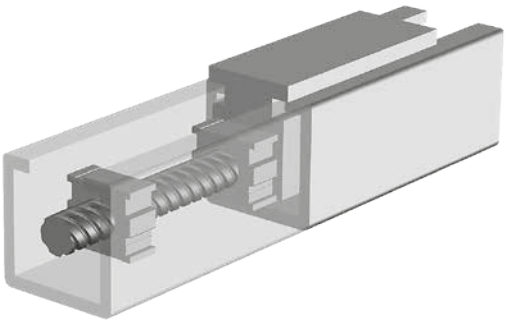

Glossary

Si - W

Single Carriage

Single carriage units have one carriage. Some linear motion system models also have the option of long or short single carriages. The long carriages handle higher loads but will have a longer overall length for a given stroke.

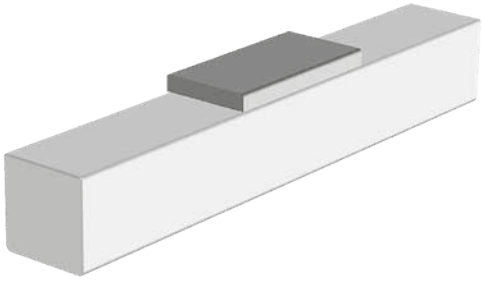

Sizing and Selection

This catalog can give you an overview of what Thomson can offer you and an indication of which products that may suit your application. But in order to get the best solution it is necessary to know your specific application and to carry out detailed sizing and selection calculations. Please contact customer service for further help.

Slide Guides

A slide guide consists of a guide attached to the inside of the profile and a slide bushing attached to the carriage. The guide can be made of different materials (e.g. polished hardened steel, anodized aluminum) while the bushing is made of a polymer material. There are two types of bushings, fixed and prism. Prism bushings can move in relation to the guide which results in longer life and higher load capabilities. Slide bushings are silent, simple, reliable and robust and can be used in dirty and dusty environments. They are also resistant to shock loads, have a long life expectancy and require little or no maintenance.

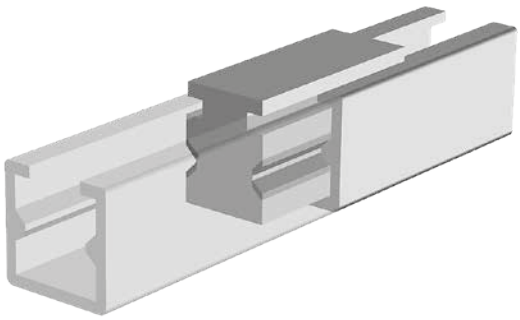

Stroke

The theoretical maximum stroke (Smax) is the length that the carriage can travel from one end of the unit to the other. However, using the maximum stroke means that the carriage will collide with the ends of the profile. The practical stroke is therefore shorter. We recommend that you specify a unit that have at least 100 mm longer stroke than the maximum stroke you need so that the unit can stop before colliding with the ends and also allow for some adjustment of the unit postition at the mounting.

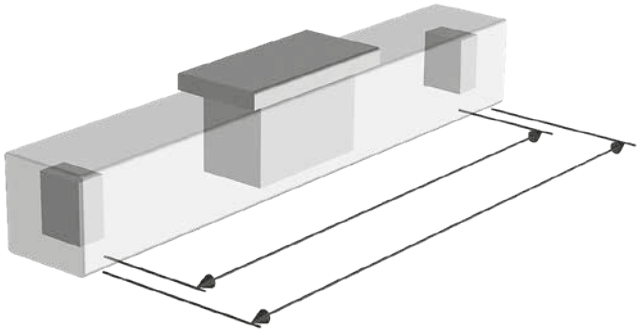

Tension Station

The tension station is the mechanical assembly situated in the opposite end of the drive station on a belt driven unit. The tension station has a mechanism that allows the belt pulley position to be adjusted thus changing the tension of the belt. Adjustment of the belt tension is normally only necessary when replacing a broken or worn out belt with a new.

Wheel Guides

A wheel guide consists of ball bearing wheels that run on a hardened steel rail. Wheel guides are a simple and robust guiding method offering high speeds, high loads and medium accuracy.

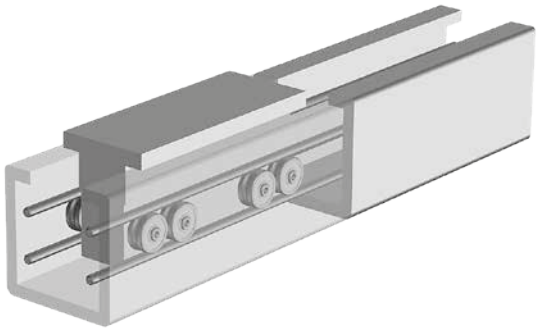

Working Environment

All units are designed for use in normal industrial environments. Units which have an open profile (i.e. have no cover band) are more sensitive to dust, dirt and fluids. These units require some kind of cover if they are used in environments where dust, dirt or fluids are present. Wash down or enhanced wash down protection can be ordered for our closed profile units. Please refer to the accessory pages. In all cases where a unit will be exposed to aggressive chemicals, heavy vibrations or other potentially harmful processes we recommend that you contact us for further advice.

EUROPE

United Kingdom
Thomson
Office 9, The Barns
Caddsdown Business Park
Bideford, Devon, EX39 3BT
Phone: +44 1271 334 500
E-mail: sales.uk@thomsonlinear.com

Germany
Thomson
Nürtinger Straße 70
72649 Wolfschlugen
Phone: +49 7022 504 403
Fax: +49 7022 504 405
E-mail: sales.germany@thomsonlinear.com

France
Thomson
Phone: +33 243 50 03 30
Fax: +33 243 50 03 39
E-mail: sales.france@thomsonlinear.com

Italy
Thomson
Via per Cinisello 95/97
20834 Nova Milanese (MB)
Phone: +39 0362 366406
Fax: +39 0362 276790
E-mail: sales.italy@thomsonlinear.com

Spain
Thomson
E-mail: sales.esm@thomsonlinear.com

Sweden
Thomson
Estridsväg 10
29109 Kristianstad
Phone: +46 44 24 67 00
Fax: +46 44 24 40 85
E-mail: sales.scandinavia@thomsonlinear.com

SOUTH AMERICA

Brasil
Thomson
Av. João Paulo Ablas, 2970
Jardim da Glória - Cotia SP - CEP: 06711-250
Phone: +55 11 4615 6300
E-mail: sales.brasil@thomsonlinear.com

USA, CANADA and MEXICO

Thomson
203A West Rock Road
Radford, VA 24141, USA
Phone: +1 540 633 3549
Fax: 1 540 633 0294
E-mail: thomson@thomsonlinear.com
Literature: literature.thomsonlinear.com

ASIA

Asia Pacific
Thomson
E-mail: sales.apac@thomsonlinear.com

China
Thomson
Rm 805, Scitech Tower
22 Jianguomen Wai Street
Beijing 100004
Phone: +86 400 606 1805
Fax: +86 10 6515 0263
E-mail: sales.china@thomsonlinear.com

India
Thomson
c/o Portescap India Pvt Ltd
1 E, first floor, Arena House
Road no 12, Marol Industrial Area,
Andheri (E), Mumbai 400093 India
E-mail: sales.india@thomsonlinear.com

Japan
Thomson
Minami-Kaneden 2-12-23, Suita
Osaka 564-0044 Japan
Phone: +81 6 6386 8001
Fax: +81 6 6386 5022
E-mail: csjapan@scgap.com

South Korea
Thomson
3033 ASEM Tower (Samsung-dong)
517 Yeongdong-daero
Gangnam-gu, Seoul, South Korea (06164)
Phone: + 82 2 6001 3223 & 3244
E-mail: sales.korea@thomsonlinear.com

www.thomsonlinear.com

Linear_Motion_Systems_CTUK-0008-05 | 20190115SK
Errors and technical alterations reserved. It is the responsibility of the product user to determine the suitability of this product for a specific application. All trademarks property of their respective owners. © 2019 Thomson Industries, Inc.

THOMSON®
Linear Motion. **Optimized.**™